Basic LAN Components

- User Work Station
- Protocol Control
- Medium Interface
- Physical Path

Bus Topology

Basic

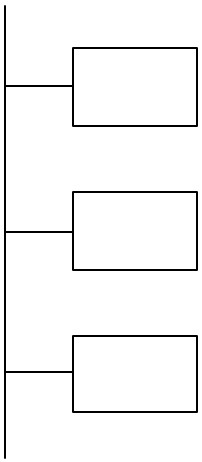

Legend

= **Device on LAN**

= **Repeater**

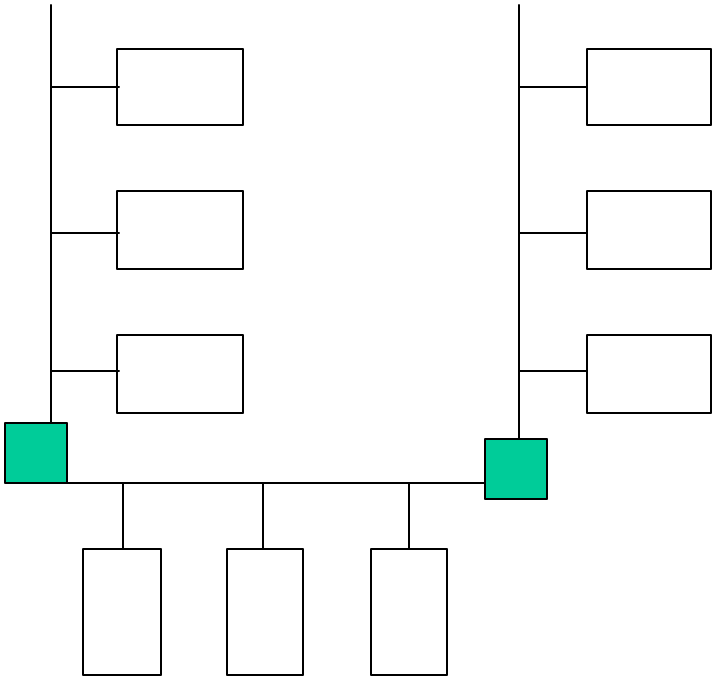

Connected via repeaters

Star Topology

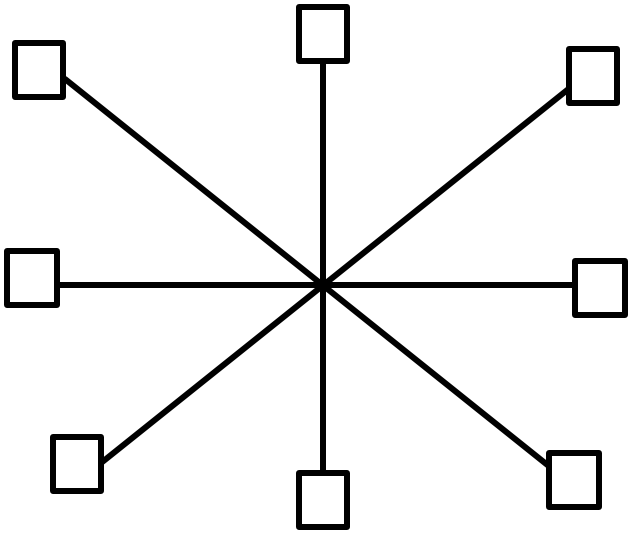

Legend

= **Device on LAN**

Ring Topology

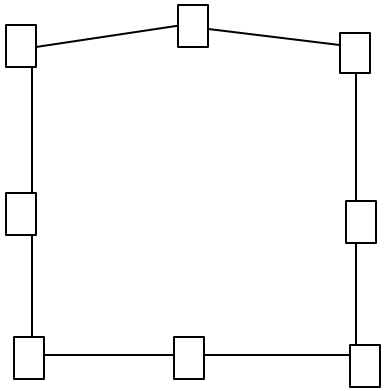

Ring

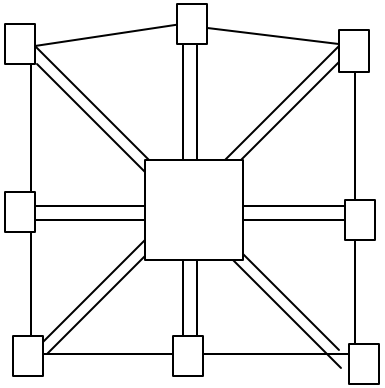

Star Ring

Legend

= **Device on LAN**

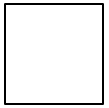 = **Centralized Repeater**

Ring Repeater States

Listen State

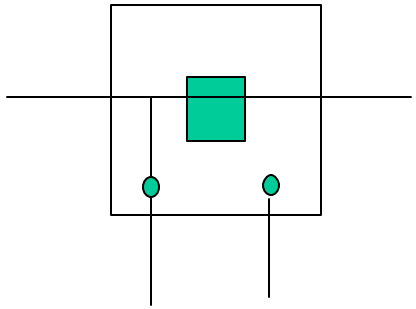

Transmit State

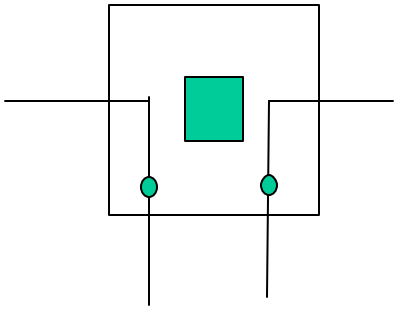

Bypass State

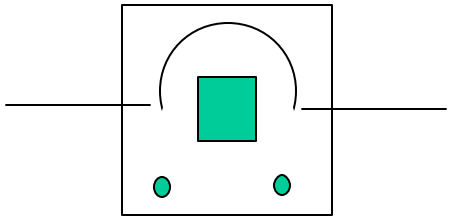

= one bit delay

Tree Topology

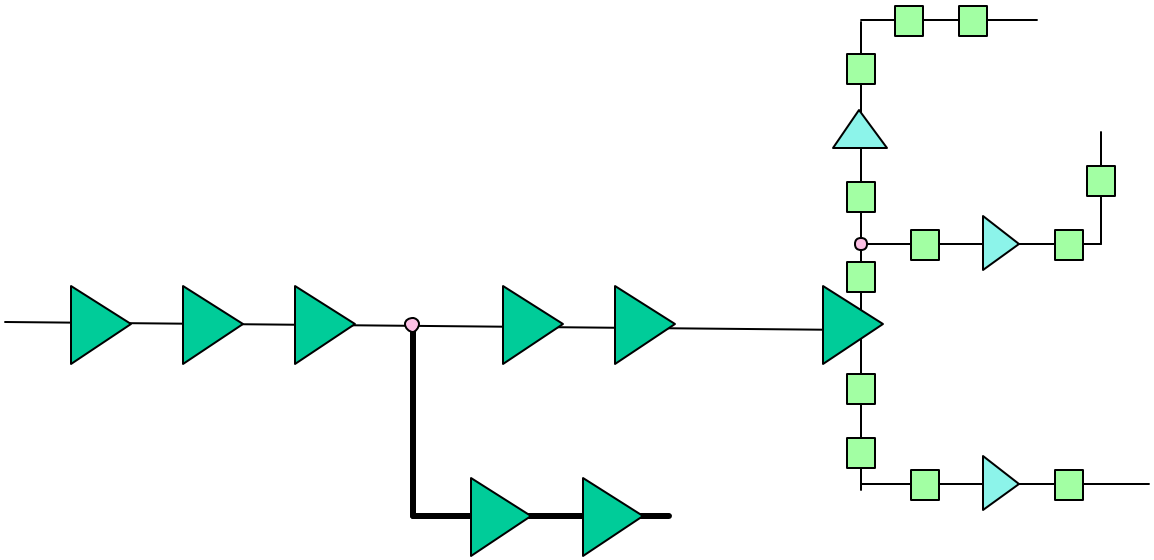

Mesh Topology

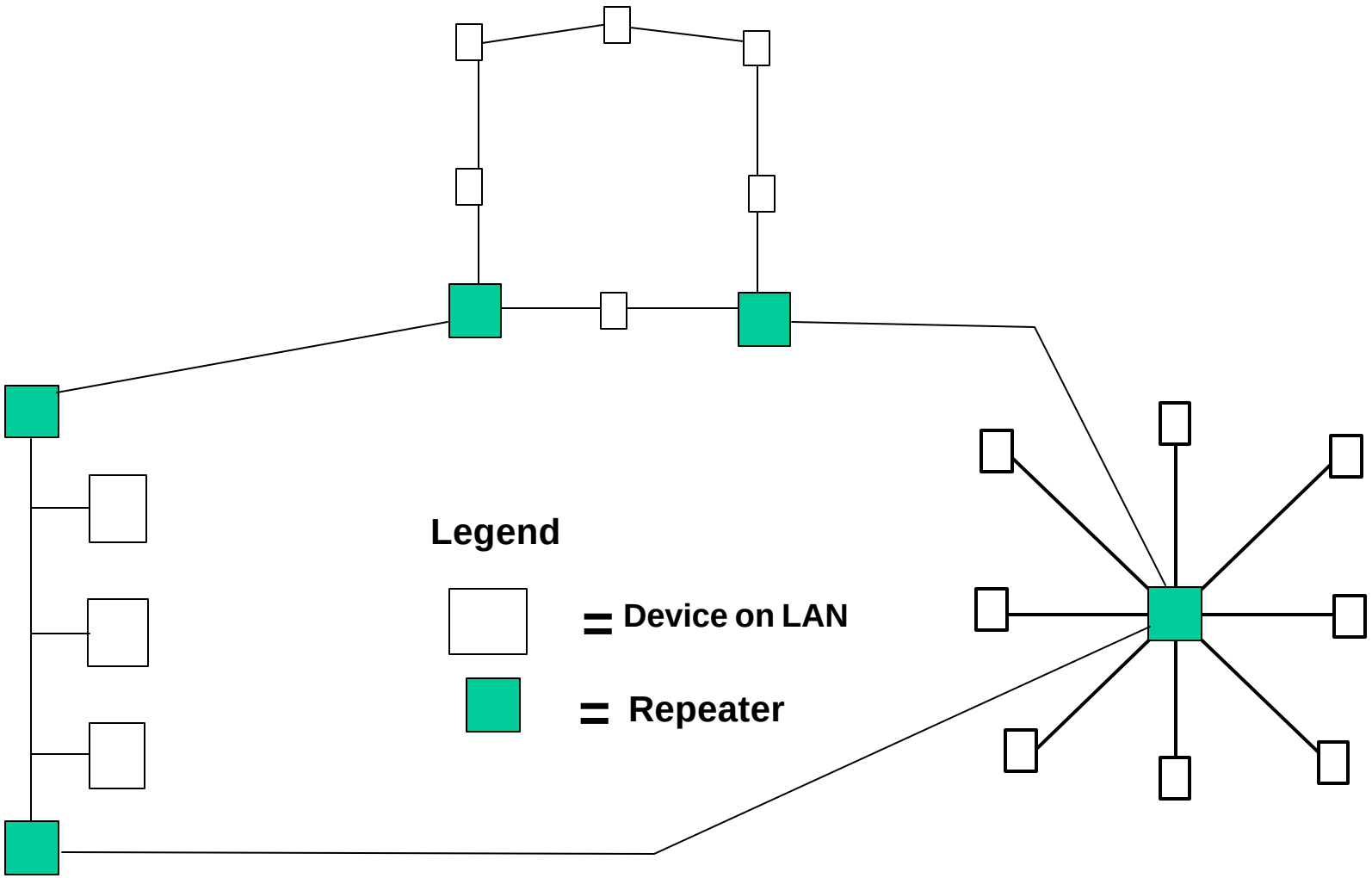

LAN Hardware

- Bridges
  - Layer 2 of OSI
  - 5 Functions
- Routers
  - Layer 3 of OSI
  - Connects dissimilar networks
  - Firewall function
- Brouters
- Gateways
  - Bi-directional
  - Protocol conversions
- Protocol Converters
  - Terminal emulation
  - File transfer in one direction

LAN Operating System

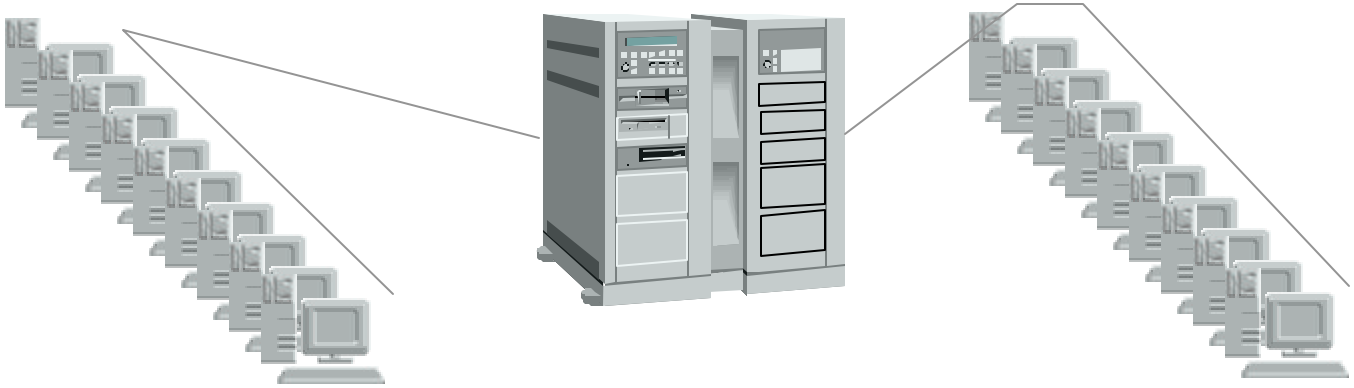

Network Operating System
- Supplements OS of PC/Computers on System
- Installed on Network Server
- Multi-Tasking & Multi-User
- Administration, diagnostics, administration, support

LAN Protocols

	IEEE 802.1 INTERNETWORKING					OSI LAYERS 3-7
	IOGICAL LINK CONTRO (LLC)	IEEE 802.2	TYPE 1 - UNACKNOWLEDGED CONNECTIONLESS SERVICE TYPE 2 - CONNECTION MODE SERVICE TYPE 3 - ACKNOWLEDGED CONNECTIONLESS SERVICE			OSI LAYER 2
	MEDIUM ACCESS CONTROL (MAC)	802.3 CSMA/CD (ETHERNET)	802.4 TOKEN BUS	802.5 TOKEN RING	802.6 DQDB (MAN)	
	PHYSICAL	BASEBAND COAXIAL AND UNSHIELDED TWISTED PAIR BROADBAND COAXIAL	BROADBAND COAXIAL OPTICAL FIBER	SHIELDED OR UNSHIELDED TWISTED PAIR	OPTICAL FIBER OR COAXIAL CABLE	OSI LAYER 1

LLC and MAC Layer PDUs

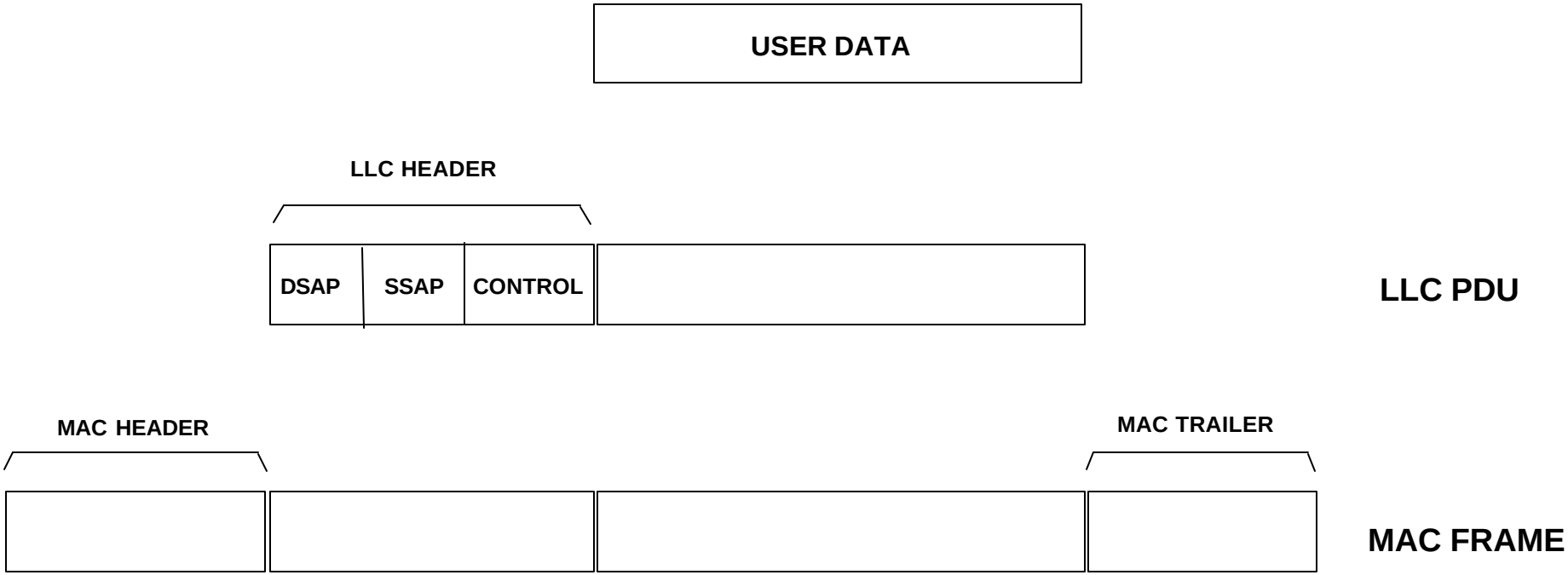

NOTES: DSAP = DESTINATION SERVICE ACCESS POINT
SSAP = SOURCE SERVICE ACCESS POINT
CONTENTS OF MAC HEADER AND TRAILER DEPEND ON PARTICULAR MAC LAYER TECHNOLOGY

Token PDU

Start Delimiter	Access Control								End Delimiter
	P	P	P	T	M	R	R	R	

P = Priority
T = Token Bit
M = Monitor Bit
R = Reservation Bit

Summary

- **Basic components of a LAN**
- **Topologies**
- **Hardware**
- **Operating Systems**
- **Protocols**
- **IEEE 802.x and the defined layers**
- **Basic LAN implementations**