DigiPoints

The Digital Knowledge Handbook

Volume III, Issue 5 August 31, 1999

Inside

History and Other Industry Commitments to FireWire

General Characteristics of IEEE 1394

Competing Technologies

How the IEEE 1394 Bus Manages Data Flows

IEEE 1394 Relationship to the OSI Protocol Reference Model

IEEE 1394 Cabling

Emerging Optical Transmission Media

Examples of IEEE 1394 Applications

What IEEE 1394 Will Mean to Cable Technicians

Additional Sources of Information

Summary

Learning Just Enough to be Dangerous: Glossary

Testing Your Knowledge

Answers to Issue 3-4 Questions

©1999 by the Society of Cable Telecommunications Engineers Inc. All rights reserved. *DigiPoints* is published monthly by the Society of Cable Telecommunications Engineers, 140 Philips Road, Exton, PA 19341-1318, 610-363-6888, August 31, 1999, Volume III, Issue 5. Office of publication is 140 Philips Road, Exton, PA 19341-1318. Developed by KnowledgeLink Inc.

Editor: Marvin Nelson, BCE, SCTE

FireWire

As consumers have become accustomed to more audio and video devices in a home entertainment system, cable personnel have been faced with increased complexity in the connections between the set-top box and the rest of the subscriber's systems. Home theater technology has also increased the number of wiring combinations that can be run from traditional interfaces such as F connectors and RCA jacks. Further complicating the wiring task is the arrival of new high-performance video output jacks such as S-video. Recognizing this problem, CableLabs® began investigating ways to consolidate the numerous potential interconnections by recommending a single standard interface specification.

As a result of its investigation, CableLabs® has selected the IEEE 1394 "FireWire" standard as the set-top box interface for future home networks, such as the one shown in Figure 1. This same standard has also been selected by the Digital Audio/Video Interoperability Council (DAVIC) and Europe's Digital Video Broadcaster's (DVB) consortium.

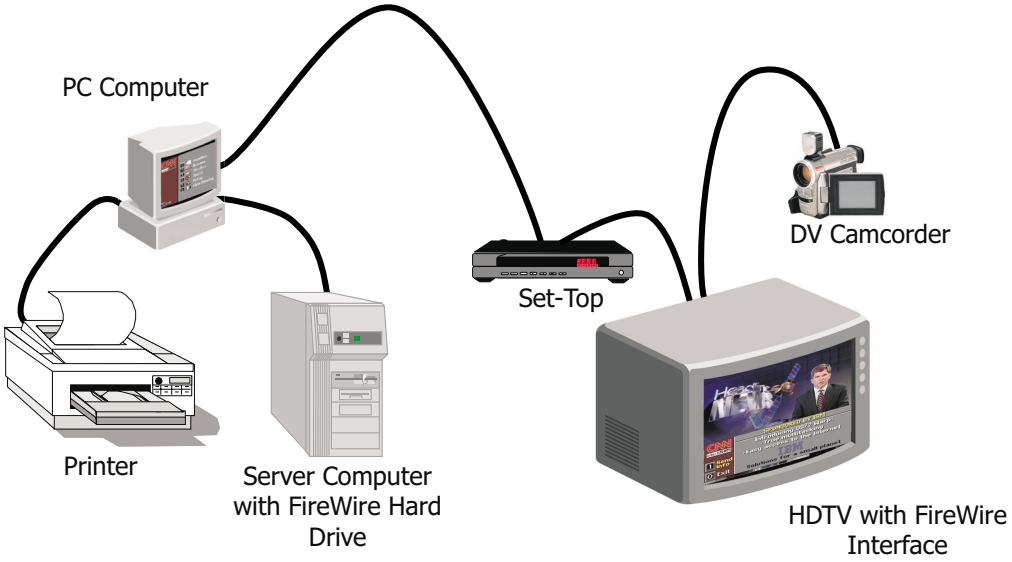

Figure 1: Typical Home Network

FireWire[1] is by no means the only standard that will be applied to home networks. This issue will show why it is a good choice for interconnection of home entertainment system components that are located near each other. For other home networking applications, however, there may be other standards that are more appropriate.

FireWire is a bi-directional interface that was designed for use by the average consumer. It can carry multiple independent streams of digital video and digital audio. In addition to being added to cable set-tops, it will be built into TVs, PCs, hard drives, printers, stereos, digital camcorders, digital VCRs, digital satellite receivers, and other consumer entertainment devices. This issue of *DigiPoints* will examine how FireWire works, emerging applications of IEEE 1394 in the video and computer industries, and the implications to cable technical personnel.

History and Other Industry Commitments to FireWire

Part of the attractiveness of IEEE 1394 is that it is not limited to the cable industry and has gained wide acceptance in other communications environments. The current standard is the merged result of two related efforts that started independently. “FireWire” got its start in 1988 at Apple computer as a cable interface that could carry digital sound. As the design evolved, it became apparent that such an interface could be used for many other tasks as well, including a bus that could be a single low-cost replacement for numerous and cumbersome interfaces.

The FireWire team included Michael Johas Teener, who had worked in 1985 at National Semiconductor on a serial protocol that was part of the proposed industry standard IEEE 1394.

1 Throughout this issue the terms *IEEE 1394* and *FireWire* are used interchangeably.

© SCTE

Teener realized that the original 1394 technology that was developed for computer backplane applications could be adapted for a cable-based multimedia bus.

In 1990, Apple made the decision that FireWire development work would be not be held as a proprietary product, but would be contributed as a public standard. The IEEE 1394 standard was revived under the auspices of a new working group. Besides Apple Computer, the initial working group included Molex Inc. of Lisle, IL, and Texas Instruments. Molex's contribution was its refinement of a Nintendo Game-Boy style connector. Texas Instruments developed the 1394's physical layer integrated circuitry. Other contributors included Stewart Connector, who designed and developed an optical fiber interface, Adaptec and Western Digital.

At first the technology did not attract a great deal of attention, but then Sony engineer Hisato Shima read an article about FireWire published by Teener and recognized that it would be perfect for connecting Sony's digital camcorder to personal computers. In 1993, Apple presented a FireWire demonstration at the Comdex show in Las Vegas. The demo consisted of a computer display with a movie playing from a hard drive in one window, while a second window displayed the video output of a camera connected via FireWire. The PC wasn't burdened with processing the camera's video since the video information arrived at the PC already formatted and ready to display. This demo ignited interest in FireWire, and in the fall of 1995, Sony Corp. was the first to commercialize IEEE 1394 with its highly successful Digital Video Handycam products: the DCR-VX1000 and DCR-VX700 camcorders.

In December 1995, the 1394 standard was ratified by IEEE. In January 1996, Microsoft, along with Sony, Adaptec, and other major manufacturers, issued a press release announcing Microsoft's intention to support the IEEE 1394 High Performance Serial Bus in future versions of Windows®. Today there are over 200 manufacturers with actual IEEE 1394 products or plans to enter the FireWire market.

In an effort to further accelerate FireWire development, Apple, along with Canon Corp., Intel Corp., Mitsubishi Electric Corp., STMicroelectronics, Zayante Inc., Compaq Computer Corp., Matsushita Electric Industrial Co. Ltd., Royal Philips Electronics N.V., Sony Corp. and Toshiba Corp. agreed to pool patents pertaining to IEEE 1394-1995 and to do the same for the two pending specifications, designated IEEE P1394a and IEC61394b Part 1. They have all agreed to license their patents on a "reasonable and non-discriminatory basis to anyone wishing to obtain a license."

In the first quarter of 1999, 300,000 Apple PowerMac G3s with 1394 were shipped, and NEC Electronics Inc., Sony Electronics Inc., Silicon Graphics and a number of other PC OEMs (Original Equipment Manufacturers) have joined Compaq Computer Corp. in putting 1394 ports on their PCs. It is estimated that approximately 8 to 10 million PCs will ship this year with 1394, and 40 million will ship with it next year.

© SCTE

General Characteristics of IEEE 1394

IEEE 1394 is a specification that includes the definition of a physical layer interface for computer device internal wiring (backplane), a point-to-point cable connection between devices (serial bus), and higher protocol layers called *link* and *transaction*. The standard defines the media (copper, optical fiber and infrared wireless), topology (its components and how they're connected) and protocol (the rules that govern how data is transmitted over it). Although a low-speed backplane version operates at 12.5, 25 or 50 Mbps, a version that operates at 100 Mbps and above is likely to become more common. Both versions are compatible at the link layer of the OSI protocol and above. This issue of *DigiPoints* will focus on the 100 Mbps version of IEEE 1394.

The latest version of the FireWire standard supports data rates of 100, 200 and 400 Mbps and is called IEEE 1394a. Yet another 1394 version is being developed, called IEEE 1394b, which will be backwards compatible with 1394a and will support a higher throughput, including 800 Mbps, 1.6 Gbps, and 3.2 Gbps. Multiple data rates are allowed on the same bus.

IEEE 1394 is, above all else, easy to use. It allows devices to be connected while the bus is active, with no need to power down before adding or deleting a device from the bus ("hot-plugable" capability). It is also "plug and play" with no need for application-specific terminators, device IDs, screws or complicated software configurations. It can support as many as 63 devices (nodes) connected in a branched daisy chain with as much as 4.5 meters of cable between devices. There can be a maximum of 16 hops through devices between any two nodes in the network. Current standards activity is underway to extend the maximum cable length between devices to 25 meters. The only major constraint in wiring per 1394 is that loops are not allowed. Both isochronous and asynchronous data transmission are supported.

Asynchronous data transfer is time insensitive and guarantees delivery by acknowledgements returned from the receiving device. It is used in traditional memory-mapped, load and store applications such as telephone modems and printer interfaces. Asynchronous data requires that the receiving device have buffer memory to accumulate the transferred data. One example of its use is data transfer on the web. Surfing the web and waiting for an image to download is an example of asynchronous data transfer.

Isochronous data transfer guarantees data transport at a predetermined rate with predictable latency. It allows video, audio and data information to remain synchronized for high-speed, real-time data transfer (as required for image editing). This real-time delivery of data is done without the acknowledgements found in an asynchronous data link and is especially important for multimedia applications. Real-time delivery enables just-in-time processing schemes and applications that reduce the need for costly buffering. An example of isochronous data transfer is the transfer of an image from a digital camcorder to a digital TV.

© SCTE

Competing Technologies

FireWire's capabilities as a home networking standard may be better appreciated when it is compared to other data interface technologies. Since FireWire is a serial bus architecture, the first level of comparison can be against parallel bus architectures[2]. Although a parallel bus such as SCSI (Small Computer System Interface) would be able to transport larger amounts of data since there are more wires to carry data, a parallel bus has several disadvantages for home networks. The presence of more wires means the cable and connectors cost more to manufacture, take up more backplane space and make for a stiffer cable. There is more potential for crosstalk, which makes additional shielding necessary. Synchronization is more difficult over distance. For these reasons a parallel bus is not the best choice for home digital networks between consumer entertainment devices.

The next level of comparison is against other serial architectures. The two most common serial interfaces are Universal Serial Bus (USB) and 10BaseT Ethernet.

At first glance, USB seems to be as good a candidate as FireWire for a high-speed digital interface in home networks. It is capable of supporting an aggregate data rate of up to 12 Mbps. USB is similar to FireWire in that it has "hot plug" capability, eliminating any need to shut down or restart the computer when attaching a peripheral. Like FireWire, USB features automatic configuration with no device identifiers or terminators needed. It has simple to use cables and connectors. Both technologies can supply power to connected devices via the bus, which makes it possible to design peripherals with less components and for less cost. Both are described in open industry standards. USB can support a greater number of devices than FireWire, with the maximum at 127 devices. Cable lengths for USB can be as long as 5 meters. Devices are connected in a tiered star configuration with a four-wire connector that uses a single twisted pair for signaling and with a power and ground connection. USB, like FireWire, supports both synchronous and isochronous data.

On the other hand, USB has several disadvantages with respect to FireWire. One difference between USB and FireWire is that USB is a polled bus, and all data transfer on the bus is under the control of a host controller. This is in contrast to FireWire where peer-to-peer transactions are possible without the intervention of a host CPU. The requirement for a host CPU makes a network more complex and costly.

Perhaps the key drawback to using USB for a home network is its bandwidth limitation. USB allows for two data transfer rates, 12 Mbps and 1.5 Mbps, and the maximum isochronous bandwidth that can be allocated to one device is 8.256 Mbps. When protocol overhead is subtracted, the useful data bandwidth is 8.184 Mbps. This means that FireWire is capable of

2 For a refresher on serial vs. parallel networks, see *DigiPoints, the Digital Knowledge Handbook*, Volume One, by Justin J. Junkus and Michael J. Sawyer, p. 54.

© SCTE

nearly 50 times the data rate of USB. FireWire's greater bandwidth plus its ability to support peer-to-peer data transfer make it the clear choice over USB for the home network.

10BaseT Ethernet is another serial architecture that might also be considered a candidate for home networks. It is a mature, well-established technology and is the most common local area network interface technology. The large number of 10BaseT networks helps to keep the cost of its components low. In addition, it can support cable lengths of up to 100 meters. A maximum of 1,024 stations may be connected to a single unbridged local area network.

The chief disadvantage of 10BaseT Ethernet technology with respect to FireWire is that 10BaseT is contention-based. 10BaseT devices are connected in a star topology using unshielded, twisted pair wiring (four wires). To share the common bus, 10BaseT Ethernet uses a technique called Carrier Sense Multiple Access with Collision Detection (CSMA/CD), which is defined in the standard IEEE 802.3. CSMA/CD works by having stations listen to the bus to see if anyone else is transmitting, and if so, it employs a random back-off delay algorithm and then retries. If no other station is transmitting, the station transmits its data. If a collision is detected, it will try again. In comparison, FireWire is synchronized by a common clock, and collisions are avoided by devices transmitting only during the time slot that they are allotted.

10BaseT Ethernet has a data throughput of 10 Mbps and cannot support isochronous data transfer. Ethernet is known as a connectionless protocol or "best effort" delivery system. It is also known as a *probabilistic* network, which means that the sender does not have complete certainty that the receiver has received the transmitted message. It also means that the amount of delay may vary widely and that the performance of the network will be affected by the number of users connected. FireWire, in contrast, supports connection-oriented data transfer and is considered a *deterministic* data delivery scheme. That means that the performance of the network is predictable, with set amounts of latency and with receivers sending acknowledgements that messages have been received.

Although Ethernet is perfectly adequate for load-and-store computer data applications, FireWire clearly has the advantage in being a better fit over short distances for the high-speed isochronous data applications that must be supported by home networks.

How the IEEE 1394 Bus Manages Data Flows

FireWire is easy to use and provides device interoperability because its rules require that every device connected to the bus must have a minimum set of standard components. For example, all FireWire nodes must implement a group of Control and Status Registers (CSR) built upon the IEEE 1212 CSR standards. These registers are memory locations that store data about the FireWire device, as well as the other devices on the bus. CSR registers define the number of available addresses. During bus initialization, each device on the bus will thus be able to "learn" what other types of devices are connected to the bus and where they are in the network. Memory stores the number and type of devices that are connected. This way, for example, a digital TV will recognize that a digital video recorder is connected to the bus.

© SCTE

CSR registers also provide standard definitions that make it possible to run software and interoperate between devices that have implemented different versions of FireWire.

The CSR architecture supports power fail recovery, error logging, fault recovery of transmission errors initiated by software and automatic bus configuration that is transparent to system software. It also defines a standard set of ROM entries that are intended to provide configuration information to be used during node initialization. ROM (read only memory) data structures provide information needed to associate an I/O (input/output) software driver and diagnostics software with a particular module node or unit. ROM may also be used to define additional parameters needed by software to access a device correctly and to define the capabilities of a node regarding bus management activities.

The CSR architecture defines an optional broadcasting mechanism that permits a node to broadcast a message over the bus that is intended for multiple targets. FireWire provides for up to 64 node addresses (0–63) with address number 63 reserved as a broadcast address, leaving the remaining 63 available for assignment to devices connected to the bus. As many as 1,023 FireWire busses may be interconnected by way of bus bridges.

Bus management also contributes to FireWire's ease of use. On the 1394 bus, three roles must be fulfilled by one or more nodes: a cycle master, a bus manager, and an isochronous resource manager. These roles are determined as the bus is initialized (activated). The cycle master initiates the bus events and starts the packet flow for each event. The bus master keeps track of the topology (layout) of the bus and the optimization of speed and performance (among other duties). The isochronous resource manager is in charge of assigning channels and bandwidth for isochronous data transfers. The 1394 bus can function both asynchronously and isochronously, and most devices will be built to operate in both modes as well. A node controller provides coordination of these services at the local level. Every FireWire device has its own node controller.

In the description that follows, it will be helpful to refer to Figure 2 to see the relationships between topology determination and the roles of cycle manager, bus manager, and isochronous resource manager.

© SCTE

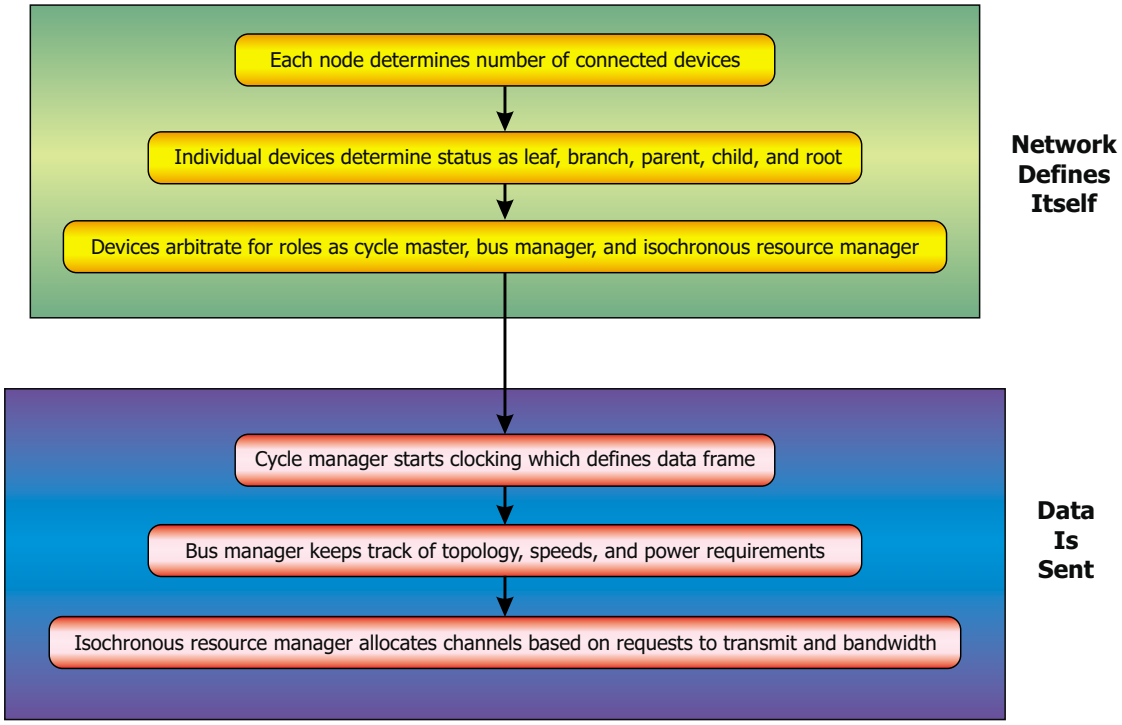

Figure 2: Managing IEEE 1394 Bus Data Flow

Initialization

When power is first applied to the 1394 network, or whenever a device is added to the network, the bus performs an initialization procedure (reset) that organizes the devices connected to the bus into a logical *tree* with devices identified as either root, branch or leaf. The intelligence for doing this resides in node controller chips installed in each device connected to the network. The initialization process culminates with one device identified as the *root*. The determination of whether a device is either a branch or a leaf depends on the number of its connections. If only one other device is connected to the device in question, it is a *leaf*. If there is more than one device connected, it is a *branch*.

The identification of the root device begins as each device determines whether it is a *parent* or a *child* of the devices that are connected to its ports. Upon initialization, each node checks its ports to see how many devices are connected to it. If it has only one device attached, it knows that it is a leaf and so sends a message called Parent_Notify. Devices that have more than one device connected receive this Parent_Notify message and respond with a Child_Notify to the connected leaf node. Branch nodes (those with more than one device connected to them) attempt to locate their own parent node by sending a Parent_Notify message to the ports that haven't received a Parent_Notify message. A device that receives only Parent_Notify messages on all its ports assumes the role of root. If two devices simultaneously send Parent_Notify messages to each other, they recognize root contention, back off, and retransmit using a random delay. See Figure 3, IEEE 1394 Tree and Branch Structure, and note that the root device has child nodes attached to all its ports.

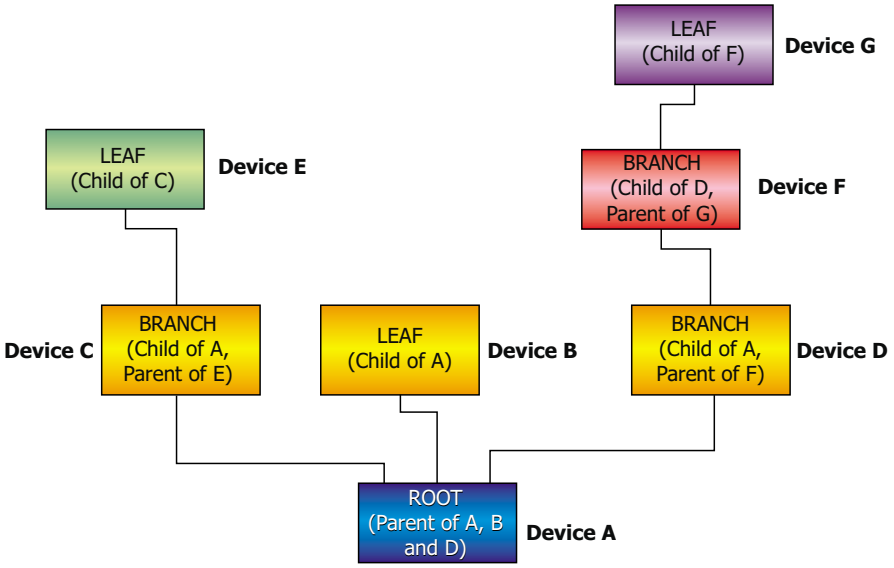

Figure 3: IEEE 1394 Tree and Branch Structure

After the tree is formed, each node gets its physical ID (an address for asynchronous data transfer) from the root, and then it identifies itself to the bus manager, if there is one.

The exchange of messages between nodes is essentially that of a *token ring* bus. This means that although the devices are arranged in a physical bus, they exchange information as a logical ring. That is, the node that holds the right to transmit is said to hold the token and passes the *token* on to the next device when it has sent its data.[3]

Sending and Receiving Data

The root node plays a special role, that of *cycle master*, and gets top priority to the bus. The root device has the responsibility of supplying a common clock source and so synchronizes all the clocks of all the devices connected to the bus. Once the clocking process is completed, the various devices arbitrate for the other two bus management roles: the isochronous resource manager and the bus manager. These tasks may be performed by the same or two different devices.

The isochronous resource manager assigns time slots to the devices wishing to transmit isochronous data. The bus manager performs higher level functions such as power management, keeping a map of node speeds, and optimizing bus performance for a particular equipment set-up. At initialization, devices capable of performing these tasks jockey for these roles. If one device is better qualified to perform the task, say a PC versus a printer and a camcorder, the best qualified will get the job. If two equally qualified devices, say two PCs, are connected, the

3 The differences between physical and logical topologies, and the way a token ring network operates, are covered in *DigiPoints*, Volume One, Chapter 10.

highest-numbered node will be the isochronous resource manager. If none of the devices are qualified to serve as the bus manager, the bus can operate without one, under limited management rules.

Although hot plugging a device into the bus causes a reset, the role of isochronous resource manager and bus manager remains with the devices to which those roles were initially assigned. The incumbent device stays in that position until it is removed from the bus, the bus is powered down, or until a user should intervene in this automatic process and designate a particular device such as a PC as bus master.

The cycle master transmits a packet called cycle start every 125 µseconds. This 125-µsecond interval defines a 1394 frame that is a multiplexing cycle for the 1394 bus. (See Figure 4.) The frame consists of a set of segments reserved for isochronous data and another set of segments reserved for asynchronous data. Isochronous data is communicated similarly to time division multiplexed data on a conventional time division multiplexed system.[4] Asynchronous data is placed on the bus similarly to the way ATM sends cells—as asynchronous packets are ready to be sent, the bus allocates bandwidth in the part of the frame reserved for asynchronous data.[5]

On every cycle, devices must arbitrate for control of the bus. The nodes with need for isochronous channels arbitrate first. As soon as a node gets a cycle start, it sends its request for access to the root. The root honors the first request it gets, which is always the arbitrating device closest to the root. Then a tiny quiet interval will occur, called an isochronous gap, after which arbitration will occur again and the next closest node is granted access. This will occur again until all nodes that need to transmit isochronous data have done so.

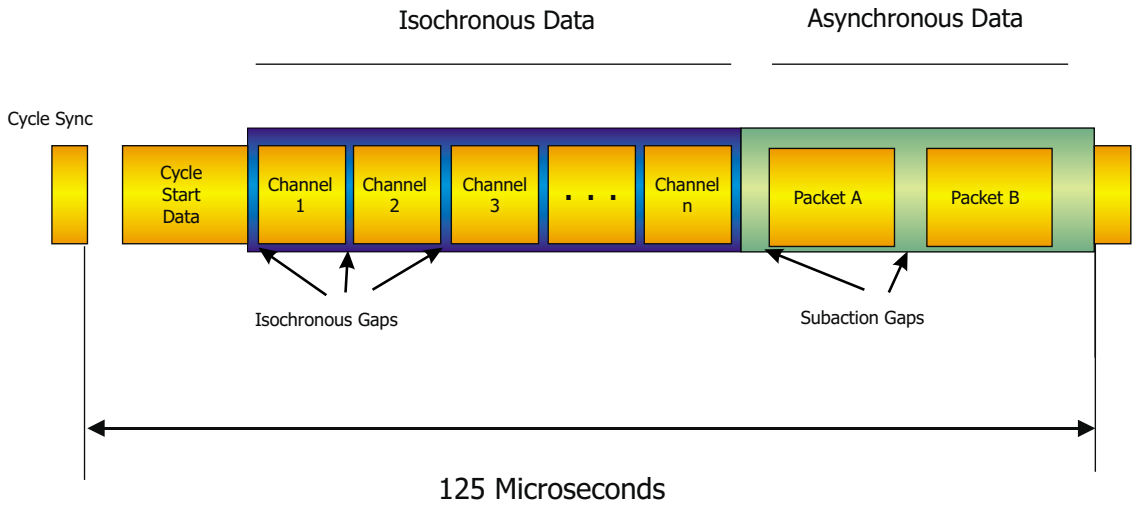

Figure 4: IEEE 1394 Data Frame

4 *DigiPoints*, Volume One, Chapter 4 discusses time division multiplexing in detail.
5 ATM is discussed in *DigiPoints*, Volume One, Chapter 12.

The isochronous resource manager assigns a device to a channel (channels correspond to time slots) and then tells the device if the channel is free. Not only do different nodes compete for access, but also isochronous data competes with asynchronous data. However, once an isochronous bandwidth has been assigned to a node, that bandwidth assignment is guaranteed. This arbitration process ensures that only one node will transmit at a time and all will have fair access to the bus. The final decision-maker in this process is the root device in its cycle master role.

After all nodes have had their chance to transmit isochronous data, a longer gap, called a subaction gap, occurs and asynchronous arbitration begins. A longer gap is needed to allow time for the return of asynchronous acknowledgements. To give all nodes equal access to the bus for asynchronous data transfer, each node is allowed to transmit only once during this asynchronous portion of the cycle, also called the *fairness interval*. A fairness interval includes periods of bus activity followed by subaction gaps and ends with a longer idle period called an *arbitration reset gap*. After that gap, all nodes can arbitrate for access.

IEEE 1394 Relationship to the OSI Protocol Reference Model

The OSI Protocol Reference model is a seven-layer data protocol, as shown in Table 1.[6] Each layer performs a set of functions that prepare the data for the layer either immediately above or below it, depending on whether the data is being transmitted or received.

OSI Layer	Layer Function
Application	E-mail, file transfer, terminal emulation, video/audio encoding and decoding
Presentation	Data formatting, data compression, encryption
Session	Session set-up and maintenance, handshakes
Transport	End-to-end delivery
Network	Routing, packet creation
Data Link	Framing, error checking
Physical	Transport of bits over some physical medium, such as RF or light energy

Table 1: Open Systems Interconnection Model

6 *DigiPoints*, Volume One discusses the OSI Reference model and protocols in detail.

© SCTE

The IEEE 1394 standard comprises three layers: Transaction Layer, Link Layer and Physical Layer. The physical and link layers correspond to the OSI model physical and data link layers. The IEEE 1394 transaction layer corresponds to the remaining five OSI layers. For the IEEE 1394 network, bus management can operate in either the hardware or software of the devices connected to the bus, and it controls functions at the transaction, link and physical layer.

The transaction layer supports asynchronous write, read and lock commands. A write sends data from the source of the data to the receiver, and a read returns the data to the source. A lock combines a write with a read by producing a round-trip routing of data between sender and receiver, including processing by the receiver.

The link layer provides a data packet delivery service between nodes for both asynchronous data and isochronous data. For asynchronous data, this layer supplies an acknowledged datagram (a one-way data transfer with request confirmation) to the transaction layer. It is responsible for all packet transmission and reception and handles data checking, addressing and data framing. This layer also formats isochronous data packets and transfers them directly to the application. It generates a cycle signal for synchronizing the packets.

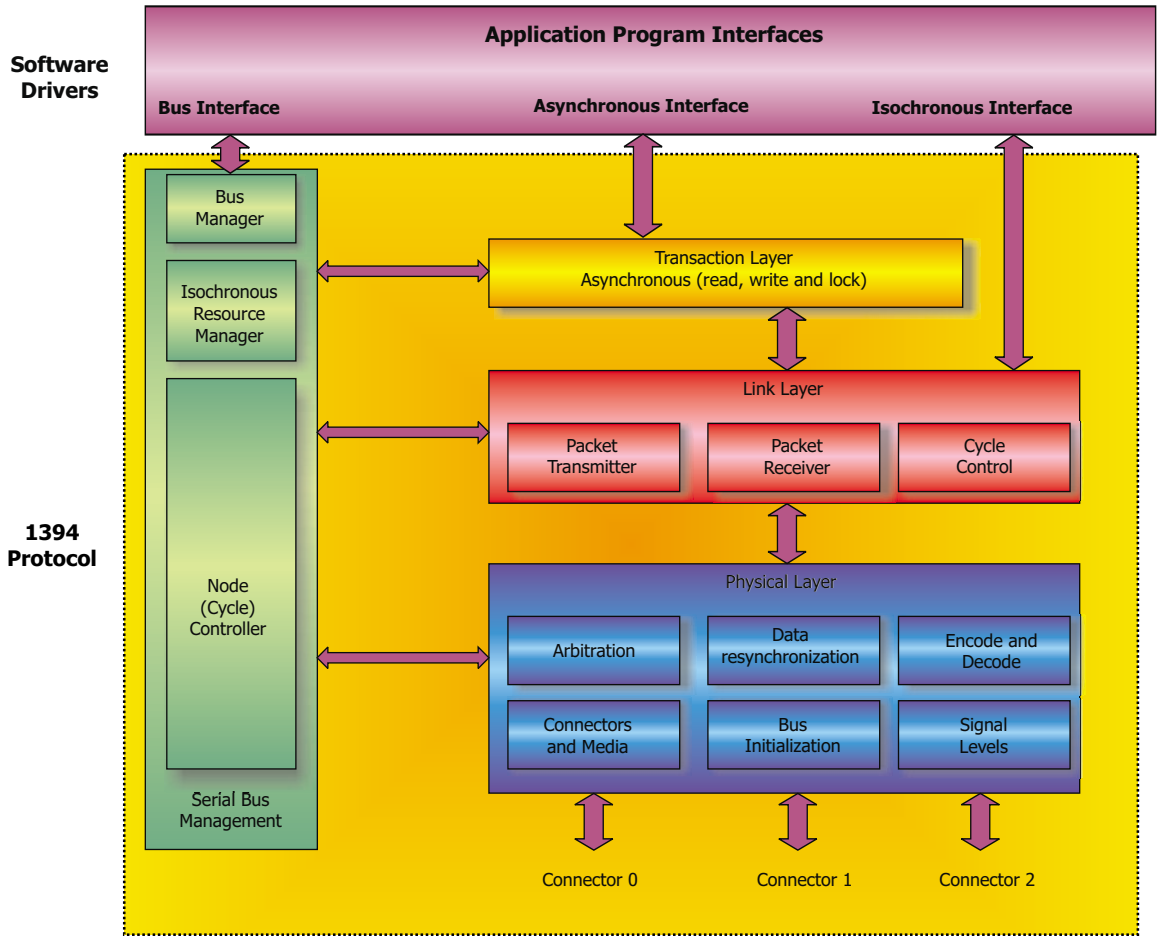

Figure 5: IEEE 1394 Three-Layer Architecture

The physical layer has three primary duties. It controls arbitration to ensure that only one device transmits data at a time. It defines the electrical and mechanical characteristics of the cable and connectors. Also, it translates the logical symbols used by the link layer into electrical signals to transmit data; conversely, it translates cable electrical signals into logical symbols in the receive direction. Figure 5 relates the IEEE 1394 protocol to the hardware and bus management tasks described earlier.

IEEE 1394 Cabling

The standard IEEE 1394 cable contains two shielded twisted pairs (28 AWG) and two power wires (22 AWG), all in a shielded, jacketed round cable. (See Figure 6.) One twisted pair, called TPA, is colored red and green and is used to carry two-way NRZ data. NRZ (Non Return to Zero) digital data has 0 bits represented by a voltage of 0 volts and 1 bits by a positive voltage (172 mV to 265 mV). The second twisted pair, TPB, carries a strobe signal that changes state whenever two consecutive data bits are the same. When the signals on TPA and TPB are passed through an exclusive OR logic circuit, a clock signal is derived. See the timing diagram in Figure 7.

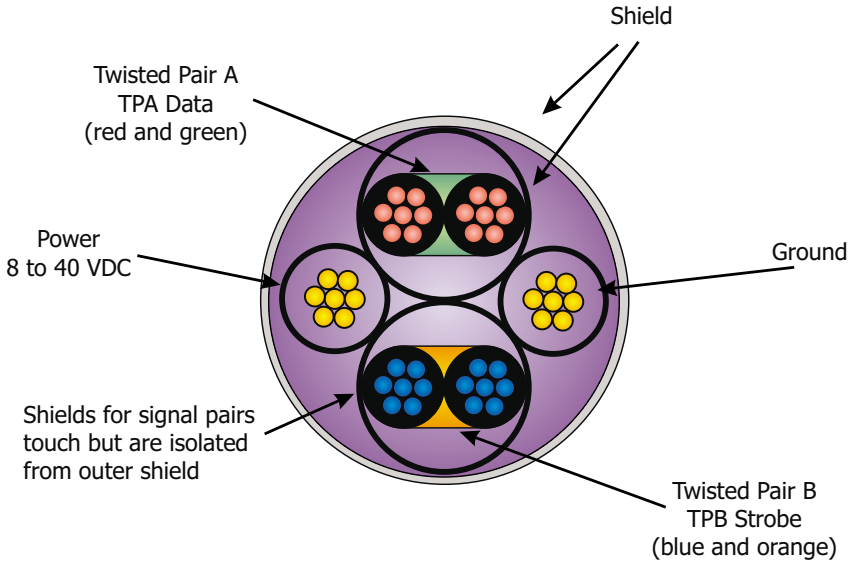

Figure 6: IEEE 1394 Cable

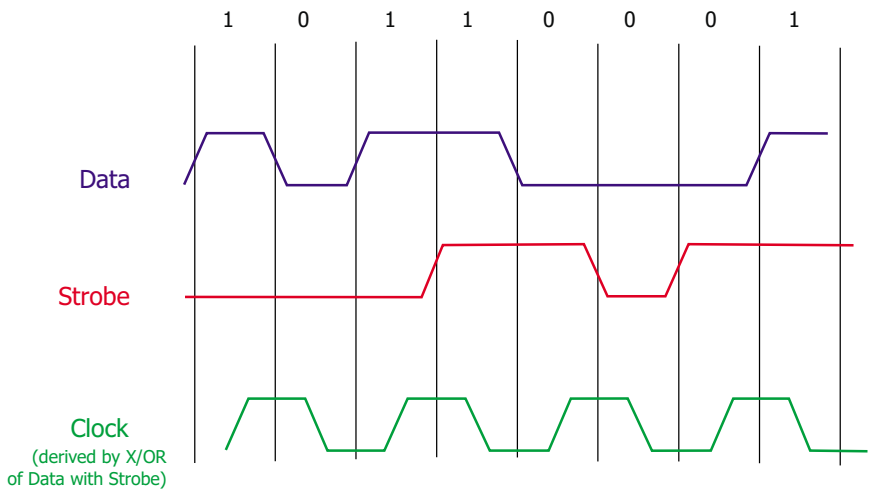

Figure 7: IEEE 1394 Timing Diagram

The inner shields of the two twisted pairs must touch, but together they must be isolated from the outer shield that is bonded to the shells of the cable connectors. Power wires carry 8 to 40 volts DC and can source up to 1.5 amps. The power wires are used to maintain a device's physical layer continuity when the device is powered down or malfunctions, an important feature for a serial bus. The power wires can also supply power to a device connected to the bus, thus enabling simplified devices that do not require their own power supply. The total cable assembly is light and flexible and easy to route.

The connector (shown in Figure 8) is also easy to use. It is an adaptation of the connector that was developed for the Nintendo Game-Boy. It was selected because FireWire is intended for home applications and the Game-Boy connector was designed to be childproof. The connector is constructed such that the electrical contact is made inside the structure of the connector, preventing any shock to the user's hands. This small connector is flexible and very easy to use, even in situations where the user must insert the connector blindly into the back of a device.

A second cable and connector design has emerged that is smaller and even lighter than the standard FireWire cable. Currently used on Sony Digital Video Handycams, this four-wire cable does not contain power wires.

© SCTE

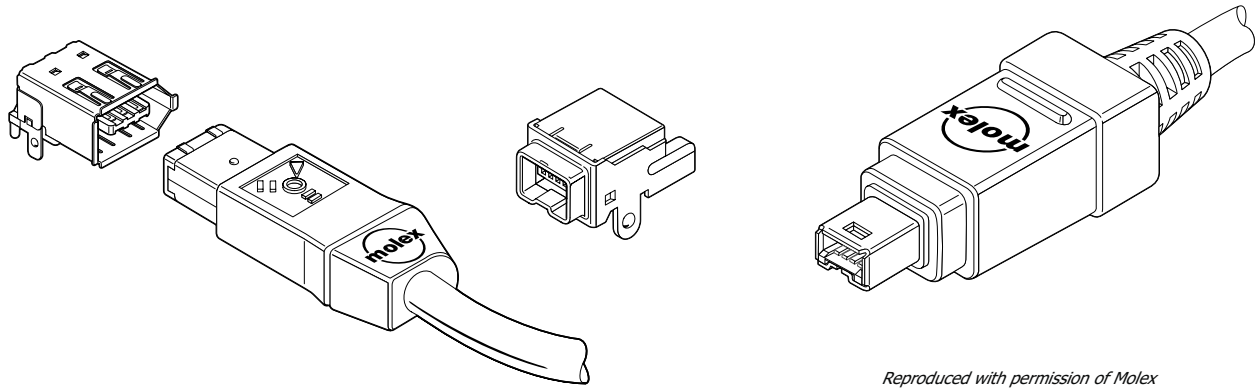

Reproduced with permission of Molex

Figure 8: Molex IEEE 1394 Connector

Emerging Optical Transmission Media

In March of 1998, NEC Electronics Inc. of Japan made available prototype repeater boxes that permit IEEE 1394 signals to be carried by plastic optical fiber. With these repeater boxes, the bus may be extended to 100 meters and support data rates up to 200 Mbps. Also demonstrated were infrared wireless repeaters that permitted the bus to be extended over six meters of air with a data throughput of up to 100 Mbps.

The next version of the IEEE 1394 standard, IEEE 1394B, will be published late in 1999, and it will address fiber-optic transport issues. Its contributors have already identified some of the necessary elements for the fiber interface. Lucent Technologies' Bell Labs has developed an optical connector that will be the standard optical connector. Small and inexpensive, it promises to bring fiber deeper into computer networks, enabling low-cost, high-speed optical data links. There is work being done at IBM to devise an Asynchronous Transfer Mode bridge to IEEE 1394. Because ATM and IEEE 1394 both have fixed packet lengths, IEEE 1394 is envisioned as a convenient interface between ATM networks and home networks. When optical fiber makes it into the home, it can be reasonably assumed that an IEEE 1394 interface will be used to bridge an ATM network to the consumer devices in the home.

Examples of IEEE 1394 Applications

The IEEE 1394 standard, like any industry standard, was devised to ensure interoperability between the products of different manufacturers. Its wide acceptance by consumer electronics manufacturers is proof of the need for a single multimedia bus standard. The consumer

electronics industry has endorsed it because the same features that were included for computer applications (low cost, ruggedness, flexibility and high throughput) are even more critical for consumer devices such as digital camcorders and digital VCRs. Because FireWire facilitates the transmission, storage and manipulation of digital video, it has found multiple applications in the digital video industry.

It is not surprising that the first commercial application of the IEEE 1394 standard was the digital video output of a Sony camcorder. Digital camcorders use CCD (charge coupled device) integrated circuits to convert the moving images focused on them to a digital data stream. The digital camcorder then performs all processing and storage of the video in the digital domain. The camera's IEEE 1394 interface (dubbed iLINK by Sony) enables output to other IEEE 1394-equipped devices, such as digital VCRs or PCs, without incurring any of the impairments that are caused by analog video processing. This is a tremendous advantage because whenever analog video is transmitted, some picture degradation is inevitable. Also, when analog video is copied, each successive copy has lower quality until the video is unwatchable. In contrast, digital video eliminates degradation during signal transmission and enables unlimited copying so long as the video remains in the digital format. This fact makes digital video highly attractive to videographers.

Video editing is another application of FireWire. Until FireWire, computer-based video editing usually entailed an analog-to-digital conversion to get video clips onto the computer's hard drive as digital picture files that could be randomly accessed and manipulated. Then after editing, digital-to-analog conversion was needed for the final output. This technique was mostly limited to professional videographers, and it is called non-linear editing or NLE. Non-linear editing is editing video by having access to all the individual video clips from a source that can deliver them up as you need them.

On regular analog tape, if a video editor needed shot No. 109 added to his project, he had to first bypass the first 108 clips. With NLE, he accesses the clip he needs and pops it into place. An analog NLE system's digital capture boards that do analog-to-digital conversion cause some picture impairment and are costly. FireWire, in contrast, eliminates the inevitable A/D and D/A signal impairments while enabling fast access to video content. The content may not even be stored on the NLE computer's hard drive, but accessed through the bus interface.

This combination of low cost, convenience and improved picture quality has brought FireWire-based NLE systems and digital camcorders to the attention of filmmakers who previously have only worked with 35-mm film. Sony recently developed a system that allows high-quality transfers of video to 35-mm film. A high number of films in a recent Sundance film competition were actually shot and edited with consumer-level digital video equipment.

The trend toward digital video will continue with the continuing development and cost reduction of High Definition Television (HDTV) equipment. Most vendors expect that FireWire will be the digital interface between set-tops and HDTV sets.

Digital motion picture projectors are yet another emerging IEEE 1394 application. Texas Instruments has a digital projector whose picture quality is reported to be equal or superior to

© SCTE

35-mm movie projectors. This projector uses an integrated circuit called a DMD whose surface is covered by millions of microscopic mirrors, each individually controlling a pixel on the projected image. This projector is under consideration as a replacement for the 35-mm film projectors in movie theaters. It would eliminate the $2000-per-copy cost of 35-mm prints and enable satellite or fiber-optic network distribution of movies. Once stored on the theater's hard drive, the cinema multiplex could transmit movie content to member theaters based on market demand for digital projection. Both the hard drives and the projection devices are candidates for IEEE 1394 interfaces.

Computer-to-peripheral communication over the 1394 interface is also growing. In April of 1997, Hewlett-Packard announced its support for the IEEE 1394 serial bus standard. HP's endorsement of 1394 for communication between computer and peripheral devices most likely indicates that 1394 will become the primary standard for computer peripherals. HP supports the standard by participating in the 1394 Trade Association's printer working group and other working groups to implement the 1394 standard in peripherals, computers and other computing appliances. HP intends to implement the 1394 standard across major product lines during the next few years. An IEEE 1394 printer could be radically different from those currently on the market. Because FireWire increases the speed for sending data from the computer to the printer, a FireWire printer could be less complex and less expensive than current models. All print rasterization could be performed in the computer and sent directly to the print head in final form, thus considerably speeding up the printing of complex graphical images in full color.

What IEEE 1394 Will Mean to Cable Technicians

Although an IEEE 1394 interface is becoming more common on PCs, FireWire home networks need not have a computer in them at all. The home network of the future will include a wide-variety of FireWire equipped devices—probably every device that will have a digital interface. This will undoubtedly include set-top boxes, stereos, TVs, digital versatile disks, digital VCRs, video telephones, satellite receivers and printers. Cable installers and customer service representatives will thus need to identify, isolate and correct problems with FireWire networks consisting of a variety of components.

The good news is that a FireWire interface is much easier to work with than the analog cabling that is currently found in home theater setups. The rules are simple; FireWire devices only have up to three FireWire ports, and the cable between devices is connected in a daisy chain *with no loops* and with branches. In addition there are certain rules that must be followed. First and foremost, non-standard homemade cabling must not be allowed. FireWire cables come ready-made in typical lengths of three, six, 10 and 15 feet.

Should unshielded twisted pair (UTP) LAN cable be used in a 1394 home network, the bus may work, but there can be a problem with electromagnetic interference (EMUS) and cable plant ingress. Thus, when FireWire becomes commonplace, it will become even more important for installers to measure EMUS in the home and to make sure the measurements are made while the FireWire bus is active.

© SCTE

Note that the amount of EMUS radiated will be dependent upon the speed of the devices on the bus. The current IEEE 1394 standard can operate at 100 Mbps, 200 Mbps or 400 Mbps. EMUS due to damaged or non-standard cabling will be worse at the higher data rates.

The installer will need to know the differences in FireWire cables. Cable is specified as either S100 or S400 cable. S100 cable is designed for 100 Mbps and S400 is designed for 400 Mbps. The S100 cable is thinner than the S400 cable since it is only shielded once, and some S100 cables carry two "big" ferrite cores on each end to reduce EMUS. S400 cables are better shielded to reduce EMUS effects. S400 cable reduces EMUS emissions by an average of 3.6 dB from the FCC limit as compared to S100. S400 1394 A/V cables are also called p1394a2.0-compliant A/V cables because they are so specified in the most recent version of the standard. Special cable is available that allows the distance between nodes to exceed 4.5 meters. C&M Corp. offers IEEE 1394 cable in lengths of 10 meters and beyond without repeaters.

Finally, the installer needs to be aware of problems that result from improper network configurations. When the cable is looped back to a device after having been connected to another device, the bus will not initialize because the loop will cause a device to see itself on the bus during initialization. Also, although it's unlikely that any one person would have that many FireWire devices, the bus would also not initialize properly if more than the maximum of 63 devices were connected.

Additional Sources of Information

Copies of the IEEE 1394-1995 and the IEEE 1394a Supplement may be obtained from the Institute of Electrical and Electronic Engineers Inc., Customer Service, 445 Hoes Lane, P.O. Box 1331, Piscataway, NJ 08855-1331. The phone number is 800-981-0060. The e-mail address is: customer.service@IEEE.org.

Perhaps the best source for information on FireWire is the 1394 trade association. The 1394 trade association was founded in 1994 to support the development of computer and consumer-electronics systems that can be easily connected via a single serial multimedia link. The 1394 trade association currently includes more than 80 companies. Further information on the 1394 trade association can be found at www.1394TA.com.

Summary

IEEE 1394, also known as FireWire, is a versatile new standard for consumer entertainment home networks. The standard has been built with the consumer in mind. Installation of devices is both "hot-plugable" and "plug-and-play." Although IEEE 1394 has many advantages over other networking protocols, it has limitations in the distance between devices and the number of devices on the network. Other factors, such as the need for easy movement of devices, may cause the home network of the future to be a hybrid of 1394 technology and other protocols, such as wireless networks.

© SCTE

Learning Just Enough to be Dangerous: Glossary

Arbitration – The allocation of bus resources. Arbitration ensures that only one node will transmit at a time and all will have fair access to the bus. The final decision-maker in this process is the root device in its cycle master role.

Arbitration Reset Gap – Interval after allocation of bandwidth to a device for asynchronous transport that indicates the availability of the 1394 bus for access by another device.

Asynchronous – Signals that are transmitted without precise clocking. The word comes from a Greek root meaning "not at the same time." Asynchronous data has guaranteed delivery, which is supported by acknowledgements of data as it is received, or requests for resend.

Bus Manager – Node in an IEEE 1394 network that keeps track of the topology (layout) of the bus and optimizes speed, performance and power management by communicating information about bus performance to each node on the bus.

Child – A 1394 network node that is one level further removed from the root than its parent node.

Control and Status Registers – Memory locations that store data about devices on the 1394 bus. Control and Status Registers in IEEE 1394 are built based on IEEE standard 1212.

Cycle Master – The node that initiates the bus events and starts the packet flow for each event and gets top priority to the bus. Also called the root device, it has the responsibility of supplying a common clock source and so synchronizes all the clocks of all the devices connected to the bus. This clock synchronization enables isochronous data transfers. The cycle master plays a central role in the arbitration process in that it transmits a message called cycle start every 125 microseconds that signals the beginning of the arbitration process in which devices arbitrate for bandwidth assignment.

Hot-Plugable – Computer or telecommunications electronics that may be plugged in "live" without the need to turn power off first.

iLINK – Sony Corp. name for its IEEE 1394 port.

Isochronous – Data transmission that provides a guarantee of a set bandwidth and a maximum amount of transmission delay.

Isochronous Gap – Short interval between isochronous data transmission by a given node.

Isochronous Resource Manager – Node in charge of assigning channels and bandwidth for isochronous data transfers. It will assign time slots (data channels) to the devices wishing to transmit isochronous data after they arbitrate for bandwidth.

© SCTE

Link Layer – Middle layer in the 1394 protocol stack.

Non-Linear Editing (NLE) – Editing video by having access to all the individual video clips from a source that can deliver them as needed.

NRZ Digital Data – Non Return to Zero digital data has 0 bits represented by a voltage of 0 volts and 1 bits by a voltage of +V volts, where the value of V depends on the system design.

Parent – Designation for a node that is closer to the root node than an adjacent node.

Plug and Play – Computer equipment that has no need for terminators, device IDs, screws or complicated software configurations and is ready for use as soon as it is plugged in.

Root – Master node that controls network synchronization.

Subaction Gap – Interval between asynchronous transmissions that provides for return of acknowledgements.

Transaction Layer – Upper layer of the 1394 protocol.

USB – Universal Serial Bus. A standard for computer device interconnection that, like IEEE 1394, replaces many other computer interconnect interfaces.

© SCTE

Testing Your Knowledge

1. What issues drove the development of the IEEE 1394 standard?

2. What are the bus speeds available in IEEE 1394? IEEE 1394b?

3. What are the bus management roles for IEEE 1394?

4. Name three other data bus technologies.

5. Compare asynchronous to isochronous data transfer.

6. What is the root device in a FireWire network? What is a branch? What is a leaf?

7. What problems may be caused by a faulty FireWire home network and how can they be remedied?

8. What is FireWire's premier application? What devices will benefit the most from its use and why?

9. What is the theoretical maximum number of FireWire devices that may be connected with and without bus bridges?

10. What do FireWire and ATM have in common?

© SCTE

Answers to Issue 3-4 Questions

1. What type of lighting is most likely to interfere with remote controls? Why?

   All fluorescent lights emit a spectral line of infrared radiation at a wavelength very close to that used by remote controls. In some of the new, compact and high-efficiency "electronic ballast" fluorescent fixtures, this may also contain modulation components similar to the common subcarrier frequencies used by remotes.

2. Name three popular bit-encoding schemes currently used for infrared remote controls.

   Pulse Position Modulation (PPM), Pulse Width Modulation (PWM), Manchester encoding, Multi-pulse. (If you answered "4-PPM" or "8-PPM," these are not yet in widespread use.)

3. What is the difference between a *universal* and a *unified* remote control?

   A universal remote is capable of controlling a range of equipment from many different manufacturers. A unified remote is capable of controlling different types of equipment, but only from a single manufacturer. So, for example, a unit such as the Navigator remote from Universal Electronics Inc. is a universal, while the Sony remote you get with your Sony TV that can also control a Sony VCR (if you have one) is a unified remote.

4. What advantage is gained by having non-volatile memory, such as an EEPROM, on a universal remote?

   This allows information such as set-up values, as well as user- or installer-configured features like macro keys or master volume control, to survive battery changes, even if the remote is left without batteries in it for an extended period.

5. What advantage is gained by equipping a remote with two IR LEDs?

   User-friendliness. Multiple LEDs allow wide- and narrow-angle components to be combined to offer both good close-up non-directionality and long range.

6. In the context of remote controls, what is a *macro*?

   A macro is a preset sequence of keystrokes that can be activated by pressing a single button. These may be factor-set or field-programmable, and typically offer features such as direct tune-in to premium channels, "all on" power control, etc.

7. What is a *fully static* microcontroller design? Why is this important for remote controls?

   A fully static microcontroller can be stopped "frozen in time" via an internal instruction and remain in that state with no loss of data or internal status until restarted by an external event such as an interrupt. This type of design is critical to remote control (and other battery-powered) applications because the power consumption in this state is extraordinarily low, allowing the unit to "hibernate" between uses to conserve battery power.

© SCTE

8. What is the advantage of the multi-PPM (4-PPM, 8-PPM) encoding schemes that are being proposed for future applications?

   These types of encoding schemes pack more data into each pulse. This both conserves power and allows a higher data rate with the same transmitter/receiver hardware technology. Both of these are likely to become significant factors in convergence applications.

© SCTE