DigiPoints

The Digital Knowledge Handbook

VOLUME III, ISSUE 1 MARCH 1999

Inside:

VBI-Based Technology

Non-VBI Data Transmission in Analog TV Signals

Advanced Television Enhancement Forum (ATVEF)

Commercial Service Offerings

The OpenCable Standard and Interactive TV

Summary

Acknowledgements

Learning Just Enough to be Dangerous: Glossary

Testing Your Knowledge

Answers to Volume 2, Issue 12 Questions

©1999 by the Society of Cable Telecommunications Engineers Inc. All rights reserved.

DigiPoints is published monthly by the Society of Cable Telecommunications Engineers, 140 Philips Road, Exton, PA 19341-1318, 610-363-6888, March 1999, Volume III, Issue 1. Office of publication is 140 Philips Road, Exton, PA 19341-1318. Developed by KnowledgeLink Inc.

Editor: Marvin Nelson, SCTE

Interactive Television

Technical developments in data delivery over analog broadcast using the VBI, horizontal overscan, and in the video itself are creating new opportunities for delivering data to set-top boxes and PCs. This issue of *DigiPoints* will focus on the ways data can be carried in analog video signals and how data communication is managed by some prominent Interactive TV services. In addition, the new OpenCable™ standard will be briefly introduced as it relates to interactive TV. When you have finished reading this issue, you should understand how data is carried in the Vertical Blanking Interval (VBI) of analog television signals and understand the major operational issues of interactive TV.

With interactive TV, viewers respond to the delivered content, making choices and selections about what they want to see on-screen. This is made possible by enhancing programming with an accompanying data channel. Some examples are:

- Team or player statistics that can be sent along with sports programs.
- Streamed stock quotes and weather conditions.
- Updates to program guides.

- Enhancements to news, such as additional details and related stories.
- Ads that can allow consumers to order merchandise with the click of a button.

Viewer input might be from a remote control, a joystick, a track ball, keyboard, or even a microphone or video camera. Interactive TV blurs the distinction between TV and PC by making services such as e-mail, web browsers, voice or video telephony and other PC applications available on TV screens. What these applications have in common is a set-top box or a PC equipped with a receiver card and data transmitted with, as part of, or in place of the TV signal.

Interactive TV can also be divided into one-way or "push" and two-way or "pull" applications. The "pull" mode is the traditional Internet approach, where a selection is made and then data is retrieved and transmitted in response. This requires two-way communication. The "push" approach can be implemented in a one-way system. Here, the user makes the selection, and the data is retrieved from the data stream and loaded into storage and displayed. In a two-way cable system, "push" can be supplemented with website access for more details.

VBI-Based Technology

History

Data transmitted as part of an analog video signal's Vertical Blanking Interval is not a new technology. Nationally, broadcast TV signals have been used to distribute data in the VBI since the '70s. It began with the National Institute of Standards and Technology's (NIST) predecessor organization, the National Bureau of Standards (NBS). The NBS proposed a system to distribute precise timing information via the VBI of nationally broadcast TV signals. This proposal did not result in a service, but the ABC network recommended that the technique be adopted for a captioning device for the hearing impaired. In 1971, the first national conference for television for the hearing-impaired met at Gallaudet University.

In 1973 PBS initiated development of a service for the hearing-impaired funded by the Department of Health Education and Welfare (HEW). As a result of this work, the FCC reserved line 21 of field one of the television signal for the transmission of closed-captioning data. In 1979, the National Captioning Institute (NCI) was founded to further the cause of captioning. In the early '80s, a set-top decoder was commercially available for closed-captioning at a cost of approximately $250. In 1989, NCI contracted with ITT Semiconductor to develop a cost-effective caption decoder chip for television sets, and in 1990 Congress enacted a law that required that all TVs over 13 inches sold after July 1993 be equipped with a closed-captioning decoder.

In 1992, NCI, the FCC and the Electronics Industries Association (EIA) developed captioning technical standards, which were published as EIA-608. EIA-608 has subsequently been expanded to include field two of line 21, adding two more captioning channels and two more text channels. A fifth channel has been added to carry Extended Data Services (EDS). EDS will carry a variety of information, including time information that will allow consumer products to have

© SCTE

their clocks set via the VBI data channel. In addition, this data will include the channel's name and call letters along with current program information and data for the so-called "V" chip, which is intended to permit parents to control children's access to programming.

Closed-Captioning and Teletext

Closed-captioning (called "closed" because it needs to be turned on or be "opened" by the viewer) delivers 503.5 Kbps of binary data. This allows for about 600 words per minute. Since only line 21 is used, the rate is slow, but adequate for its purpose. It should be noted that the system was designed at a time when circuits for correction of defects in the transmission channel were expensive, so a conservative data rate was selected to minimize the complexity of the receiver.

In parallel with the development of closed-captioning, a VBI data transmission system called "Teletext" was developed that delivers a maximum of 5.727272 Mbps. This system is called the North American Basic Teletext Specification (NABTS) and is published as EIA-516. Teletext, or similar VBI data schemes, received wide acceptance in Europe and Japan, perhaps because broadcasting is supported by government subsidies. In the United States, at the time Teletext was introduced, the electronic components that made up its decoder were still relatively expensive and so limited Teletext's affordability. Limited paying applications and the high cost of the technology stifled widespread adoption.

One notable success of applying the Teletext standard has been PBS, which implemented a VBI-based packetized data delivery system called the PBS National Data Network. This

Sidebar – Teletext Data Capacity

The standard NTSC television signal is comprised of two fields each with 262.5 lines of video. The two fields are labeled as an odd field and an even field. Each line has a duration of 63.5 microseconds. A portion of this time (the horizontal blanking interval) is reserved for the sync pulse blanking and color burst. The remainder, 50.3 microseconds, is used for video transmission. Per the EIA-516 standard for the North American Basic Teletext Specification (NABTS), data is inserted at a constant rate of 5.7272 Mbps. This yields 288 bits per line (50.3 microseconds x 5,727,272 bits per second = 288 bits per line). These 288 bits form a 36-byte packet. Any data that is to be inserted into a scan line must be broken into these 36-byte packets.

The 36 bytes are broken down as follows: three bytes for hardware synchronization, three bytes for the packet address, two bytes for sequencing information, and 28 bytes for data and redundant forward error correction (FEC) information. The three-byte hardware setup and three-byte packet address bytes are always added automatically to each packet by the insertion system. The assembly of the remaining 30 bytes per packet varies with the mode of operation and forward error correction options used.

Any of the 262.5 video lines, except lines one through nine that are used for vertical synchronization, can be used to transmit data. When all the lines except one through nine are used for data, the transmission is called full-field data transmission. This type of data transmission eliminates the ability to transmit video. More often, lines 10 – 20 in the vertical blanking interval are the only ones used for high-speed data transmission; hence, this form of Teletext data transmission is known as VBI data transmission. Line 21 is used for closed-captioning, and lines 22 – 262.5 are the active picture.

© SCTE

data network of PBS-member television stations provides secure, high-speed data broadcasting services that can be received at homes, businesses, government offices, and educational facilities nationwide. A television, PC, printer or combination of the three may receive data. The system delivers 9600 bits per second per VBI line.

Recently, PBS has partnered with WavePhore Inc. to distribute digital data via PBS's VBI through its network of more than 250 PBS-member television stations. Those stations reach about 99% of television households in the United States. This new consumer network will be added to WavePhore's other managed networks which include business-to-business data transmission over the VBI through the Canadian Broadcasting Corporation, in addition to such technologies as small-dish satellite, FM radio subcarriers, and television in-band (TVT1/4). PBS also carries the StarSite Electronic Program guide via the VBI of the PBS signal.

Vendors

A leading developer and manufacturer of TV data broadcast equipment for the VBI data channel has been the Norpak Corporation, based in Ontario, Canada outside Ottawa. Incorporated in 1972, Norpak has specialized in the development of television-based data transmission systems and interactive on-line information systems. Norpak is recognized as the co-developer of the North American Basic Teletext Specification and built the first NABTS delivery and reception system in 1978. Other manufacturers, notably Microsoft and Intel, also have products that enable data to be transmitted and received using the EIA-516 standard. Intel manufactures the Intercast line of products, and Microsoft has WebTV, as well as several initiatives aimed at supporting interactive TV with software for both PCs and TV set-top boxes.

Non-VBI Data Transmission in Analog TV Signals

In 1993, the National Data Broadcasting Committee was formed by the National Association of Broadcasters (NAB) to establish a single standard for data transmitted *within* the video portion of broadcast TV signals. Manufacturers, in response to the request for proposals, submitted four proposals. Two of these used the horizontal overscan. These systems replaced the transmitted video signal with digitally encoded information in a small part of the picture not normally seen by viewers, at the end of each horizontal line of the scanned picture.

Depending on the particular encoding method, a video display of overscan data could look like dots or dashes. These dots or dashes could be colored or black and white. They could also be moving or stationary. If stationary, they could flicker. However, as these visible effects of data encoding are located at the extreme top or side of the TV picture, they are very seldom seen. This is because all TV sets to some extent "overscan" the picture, covering the edges of the picture tube with the television cabinet to ensure that the visible portion is completely filled with the picture. Overscan systems are capable of providing only relatively low data rates, on the order of 15 to 20 Kilobits per second (Kbps), and for this reason were not accepted.

© SCTE

As a result of the qualification process, in 1996 the FCC approved two techniques for digital data transmission in its Report and Order (R&O) "Digital Data Transmission Within the Video Portion of Television Broadcast Station Transmissions." This R&O allows data to be carried within the video portion of NTSC signal in two alternate formats. The first combines VBI carriage with a data subcarrier approximately 4.197 MHz above the video carrier, synchronized with the horizontal line frequency. This subcarrier system proposed by WavePhore Inc. yields 384 Kbps (one quarter of the telephone T1 rate) and is named TVT1/4. When combined with the WavePhore VBI system, the total throughput is 500 Kbps.

The second system proposed by Digideck Inc. uses a differential quadrature phase shift keyed (DQPSK) data carrier that delivers 500 Kbps and is carried one MHz below the video carrier. This is similar to the European NICAM digital audio system. The Digideck data carrier is transmitted in the Vestigial Side Band region of the transmitted signal, and so it requires that the transmitter output filter have decreased slope.

More recently, another technique has emerged that has great promise and may even extend the viability of analog TV. This technique, developed by the EnCamera Sciences Corporation, embeds up to 4.5 Mbps in a 6 MHz analog television signal. Three Mbps are modulated onto a data carrier carried in quadrature in the Vestigial Sideband region of the channel. An additional 1.5 Mbps are carried by multilevel amplitude modulation of the aural carrier. This much data bandwidth could be used to distribute MPEG-2 compressed programs.

Advanced Television Enhancement Forum (ATVEF)

The emergence of these technologies has prompted the formation of a group called the Advanced Television Enhancement Forum (ATVEF) to develop a standard to facilitate the creation and distribution of enhanced programming. The ATVEF is concerned with display of television within web pages and delivery of data-enhanced TV programming via one-way broadcast. This group includes companies representing broadcast and cable networks, television stations, cable and satellite service providers, and the consumer electronics, PC and software industries.

The authors of the specification are CableLabs, CNN, DirecTV Inc., Discovery Communications Inc. (DCI), The Walt Disney Company, Intel Corporation, Microsoft Corporation/WebTV Networks Inc., NBC Multimedia Inc., Network Computer Inc. (NCI), NDTC Technology; Public Broadcasting Service (PBS), Sony Corporation, Tribune Company and Warner Bros.

ATVEF has defined protocols for television programming enhanced with data, such as Internet content. These protocols specify how announcements, content, and triggers are to be carried within the data stream. Announcements are broadcast on a single well-known multicast address and have a time period for which they are valid. Announcements also indicate the multicast address and port number that the client can listen in on to receive the content and triggers. Announcements also contain information that can optionally be used by the client to help decide whether to automatically start receiving trigger and content information. Triggers initiate a script that is run on the local client, be it a set-top box or a PC.

© SCTE

The goal for the ATVEF is to allow content creators to design enhanced programming that may be delivered over any form of transport (analog or digital TV, cable, or satellite) to all types of broadcast receivers that comply with the proposed specification. The ATVEF is working with other industry groups and standards bodies to incorporate the specification as part of those groups' standards, in order to provide a consistent international blueprint for enhance products and services.

Those bodies include OpenCable, Digital Video Broadcasting (DVB), Advanced Television Systems Committee (ATSC), World Wide Web Consortium (W3C) and the Society of Motion Picture and Television Engineers (SMPTE). The ATVEF anticipates the first compliant receivers and programming will be available in the first half of 1999.

Other companies intending to work with the ATVEF to accelerate development of products and services include Cable and Wireless Communications, Digital Renaissance, E! Entertainment Television, The Fantastic Corporation, Hitachi Limited, Macromedia Inc., Mixed Signals Technologies, National Geographic Ventures, Sharp Corporation, The Weather Channel and Wink Communications.

Commercial Service Offerings

Interactive services may be one-way or two-way and have a variety of upstream communication requirements. Software in the set-top box or PC can create an illusion of two-way communication by presenting the viewer with choices whose responses are or will be present in the data stream.

For example, a music video could be accompanied by three data streams, one listing upcoming concert dates, one listing the band's CDs and a third with biographical sketches of the band members. When the viewer makes a selection, no information is transmitted upstream to retrieve the data. The data is simply extracted from the VBI and presented on-screen. These one-way services may be quite elaborate, replete with graphics and multiple choices. Obviously, these one-way services can be further enhanced to include upstream communication. Two-way interactive services can differ widely in upstream and downstream data bandwidth requirements as well as tolerance for network latency.

The issue of network latency is central to the viability of certain applications such as multi-player interactive games and telephony. Network latency is defined as the time that it takes from when the transmission starts at its origin to when it has been completely received at its destination.

© SCTE

Mathematically, latency = time per bit * number of bits + travel time.

Latency Examples		
Network	**Travel Time**	**Time Per Data Unit**
Ethernet LAN	0 – 3 msec	Insignificant
Modem-to-Modem	~ 100 msec	~ 1 msec/byte
PPP-to-PPP (4 analog modems)	~ 200 msec	~ 2 msec/byte
ISDN-to-ISDN	~ 10 msec	~ 0.5 msec/byte
Internet	From a few msec up to a few seconds	Highly Variable

Some services can tolerate delays of many seconds or even hours. Interactive program guides and pay-per-view TV are examples of such applications. Program guides are downloaded into set-top box memory that is refreshed periodically by updates from the downstream data stream. Pay-per-view works by enabling immediate access to scrambled channels and then recording the purchase in the set-top box's non-volatile memory until the purchase data can be collected later by a system controller.

The system controller "addresses" each set-top box in the system via a poll, which asks each box whether it has any purchases. If a box does, it transmits the purchase record upstream to the addressable controller, which then forwards the record to a separate billing system. This is called a store-and-forward polled addressable system. The requirements for the set-top box include a microprocessor, some non-volatile memory, and an upstream data channel. The upstream channel usually communicates via a frequency shift keyed (FSK) RF modem or a low-speed telephone modem.

This technology can be used as is for some VBI-based applications, or it may be enhanced to reduce network latency by adding a network control layer such as time division multiple access (TDMA) communications to the upstream communication channel. TDMA is a system that allows multiple users simultaneous access to the upstream by synchronizing the communicating devices and then assigning time slots to particular users[1]. These time slots may be assigned dynamically with a headend network controller monitoring and managing the upstream bandwidth, insuring a very low latency for all users. By implementing TDMA communications between the set-top box and the headend, the set-top box may initiate communication and not have to wait for a poll signal to transmit.

1 For a discussion of TDMA, see *DigiPoints, The Digital Knowledge Handbook, Volume One*, ch. 4.

© SCTE

Latency presents a particularly thorny problem for satellite implementations of two-way interactivity. This is because the latency includes the time it takes the data to traverse the 22,282-mile distance up to the satellite in geosynchronous orbit and then another 22,282 miles back down to the receiving antenna. Given that the signal travels at the speed of light, this distance causes a 250-millisecond delay. Thus, interactive services that do not include a satellite link can have far less latency.

There are several commercial offerings of interactive services. We will profile Wink Communications, WorldGate, ICTV, and OpenTV as four examples of different technology applications. Wink Communications is primarily a one-way service that carries data in the video signal, either as VBI data or MPEG-2 data streams. WorldGate is a two-way service, also carrying data in the video signal. ICTV centralizes all data capability and moves data as a video signal. Finally, OpenTV is a satellite-based service that uses a telephone return.

Wink Communications

Wink Communications offers both one-way and two-way interactive services via technology incorporated in the set-top box and headend equipment. Based on a compact client-server architecture, Wink technology takes little set-top memory, reducing the cost of deployment. Wink interactive data may be delivered to the set-top box either by the VBI or via an MPEG-2 data stream.

Wink technology is the basis for the IT Vision Promotion Consortium, made up of 50 of the world's most dominant consumer electronics, broadcasting, trading, advertising and telecommunications concerns. Members include Toshiba, JVC, Sony, Matsushita, Nippon Telephone and Telegraph, and NHK. In addition, the world's largest manufacturers of cable and satellite equipment, General Instrument, Scientific-Atlanta, and Pioneer, have licensed Wink technology. Many U.S. content providers are developing Wink enhancements, including NBC, The Weather Channel, CNN and Court TV.

Sidebar –
Client-Server Architectures

A client-server architecture is a computing model, which divides applications between clients and servers.

Clients are the devices whose role is to run the user interface and perform some local processing. Servers are devices that respond to specific requests by a client with specified actions, such as database queries or network access.

Effectively, computing and storage become centralized in the server, allowing clients to be relatively simple, less expensive devices. With Interactive TV, set-top boxes are the clients, which are connected to their servers via the television signal.

© SCTE

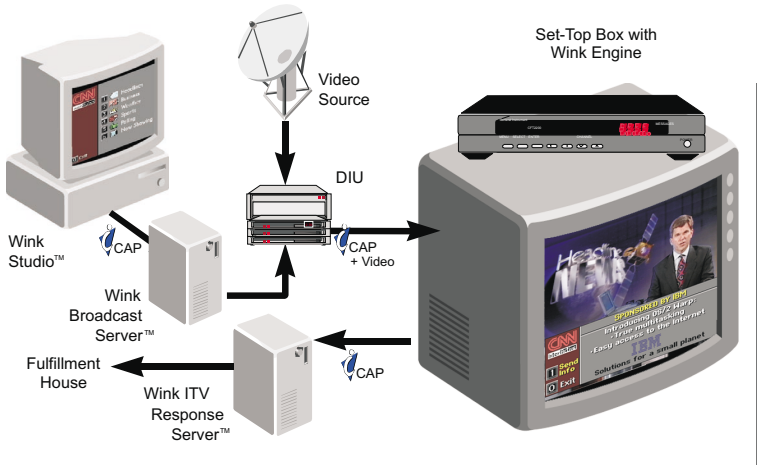

Figure 1: Wink Broadcasting System Architecture

The Wink Interactive Television system begins with the authoring tool, Wink Studio™, used by content providers. Wink Studio™ is a PC Windows-based software tool used to create an interactive application. It lets developers drag and drop pre-packaged program elements to create an application; similar to the way a slide presentation is created in Microsoft PowerPoint.

Once authored, Wink broadcast enhancements are delivered to the set-top box along with the video signal via the VBI or via an MPEG data stream. The set-top box must be equipped with the Wink Engine (another software program) to provide access to the services.

It is also possible for operators to offer their own locally branded interactive content. Applications authored with the Wink Studio™ can be placed on the Wink Broadcast Server™. The Wink Broadcast Server™ acts as an electronic carousel that schedules, manages and delivers the applications to subscribers with access to both national and local one-way interactive content.

Two-way applications, either national or local, require the Wink Response Server™, which attaches to the Addressable Controller to collect and route responses. With the Wink Response Server™, the set-top box equipped with the Wink Engine can collect user responses to interactive content, including informational or business transactions. The Wink Response Server™ collects subscriber responses and forwards them to the appropriate fulfillment house via the Wink Response Network, a suite of response routing services. These services include the collection of subscriber responses, billing, reporting and forwarding of responses to the appropriate fulfillment operations. Operators share in the revenue streams associated with this business.

© SCTE

Wink's value to cable operators is further enhanced by its partnership with software vendors who write revenue-generating applications for the Wink platform. Foremost among these software vendors is CableSoft, who has developed a suite of companion "information-on-demand" services that can be deployed by the local operator, enabling local advertisers and others to get their message out via the Wink system. One example is CableSoft's LocalWorks™. LocalWorks™ creates a "Communications Neighborhood," enabling local community organizations to communicate with interested parties via information posted on "Pages." This provides cable subscribers a quick and easy way to find information about the town in which they live.

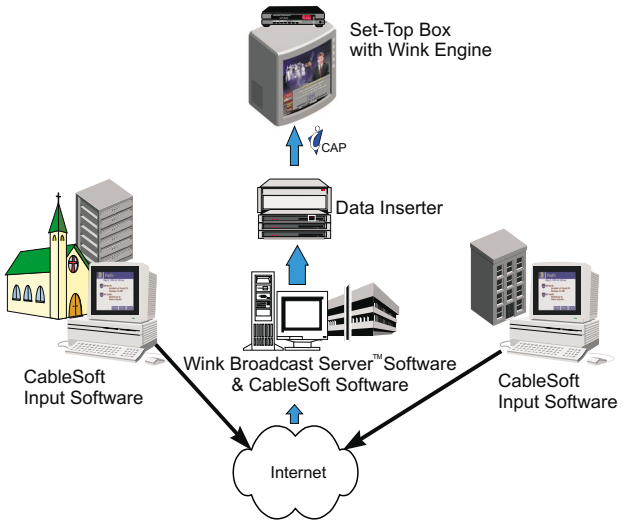

Figure 2: CableSoft Information On-Demand System

Some other examples of CableSoft Wink software applications include prepackaged electronic directory services called FastYellow™ and ClassiFinder™. These are offered by CableSoft either on a turnkey, revenue-sharing basis or by cable operators taking responsibility for creating the content and running the business themselves. The concept is that interactive services carried in the previously unused data bandwidth of the VBI will generate revenue for cable operators by offering subscribers access to electronic messaging and classified advertisements.

WorldGate Communications

Wink and WorldGate share some basic characteristics. Both use hardware and software incorporated into the cable box and the cable headend. Both provide platforms for both digital and analog set-top boxes. Like Wink, WorldGate is a "thin" client requiring only 64K bytes of RAM to operate. However, where Wink offers both one-way and two-way applications and is focused primarily on "push" technology, WorldGate is strictly two-way. WorldGate can be considered a complementary service to Wink, and indeed, they can operate in the same cable system.

Besides offering web browsing and e-mail, WorldGate includes a unique means of linking broadcast television with internet content through its Channel Hyperlinking™ process. This

technology enables cable subscribers to move directly between television programming and related content on the Internet with a single keystroke on a standard cable remote control. Channel Hyperlinking™ joins TV programming content to an Internet site via a database that is maintained by the North American Channel Hyperlinking Organization (NACHO). This database is periodically downloaded to the WorldGate headend server and lists Internet-site URLs associated with programs and geographical locations. Channel Hyperlinking™ eliminates the need to enter the URL address of the website and seamlessly integrates cable television and the Internet.

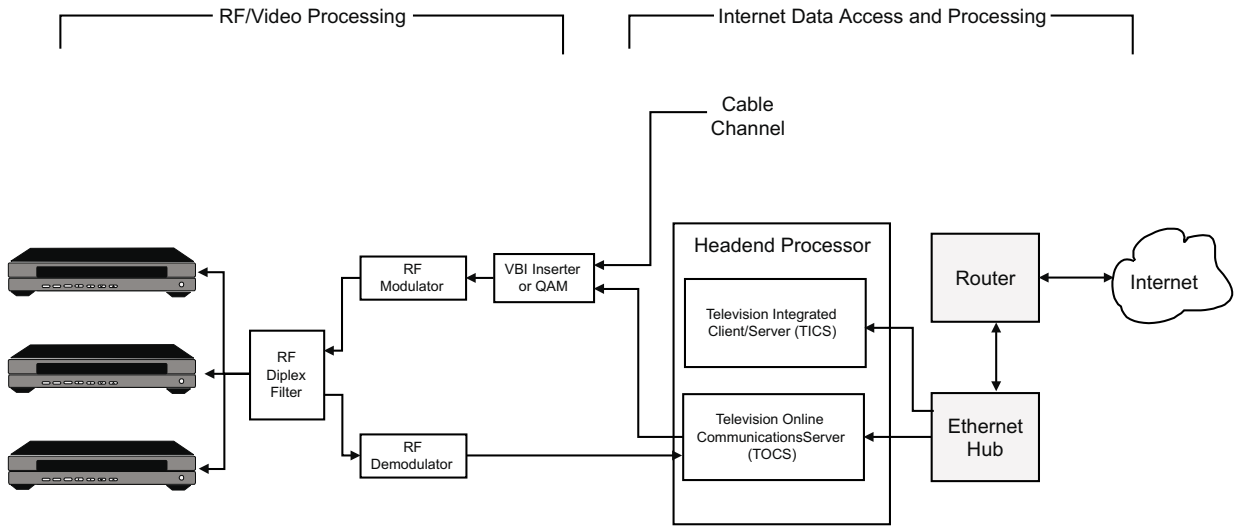

Figure 3: WorldGate Overview

WorldGate's analog service platform is currently available for the General Instrument CFT2200 and the Scientific-Atlanta 8600wg advanced analog set-top converters. The WorldGate analog platform offers peak speeds of 128 Kbps downstream and 14 to 20 Kbps upstream and up to 16 million colors. This capability is realized by implementing a software client that requires only 64 KB in the set-top box. Picture resolution is equal to the maximum available on a TV. The WorldGate digital platform uses MPEG-2 instead of the VBI and achieves a downstream data rate of 27 Mbps and an upstream of 256 Kbps. WorldGate may also be implemented in one-way cable systems with set-top boxes equipped with telephone return.

The WorldGate system is comprised of two main parts, RF/Video processing and Internet data access and processing. The RF/Video processing part sends subscriber requests both upstream and downstream, between the WorldGate Server and the set-top box. The Internet data access is managed by a headend processor (a UNIX-based Internet server) that receives subscriber requests, interacts with the Internet and sends the processed request back to the set-top box.

© SCTE

The equipment necessary includes the Headend Server (HES), a VBI Inserter, a WorldGate Multiplexer (interface to QAM modulator), a QAM modulator, a WorldGate-enabled set-top box, and a special remote or IR keyboard.

The Headend Server has two primary components, the Television Integrated Client/Server (TICS) and the Television Online Communications Server (TOCS). Basically, the TICS manages communications with the Internet via a high-speed connection through a router, and the TOCS manages communications between the population of set-top boxes and the TICS. The system is scalable, with multiple TICS and TOCS working together with the total number required dependant on subscriber demand and network architecture.

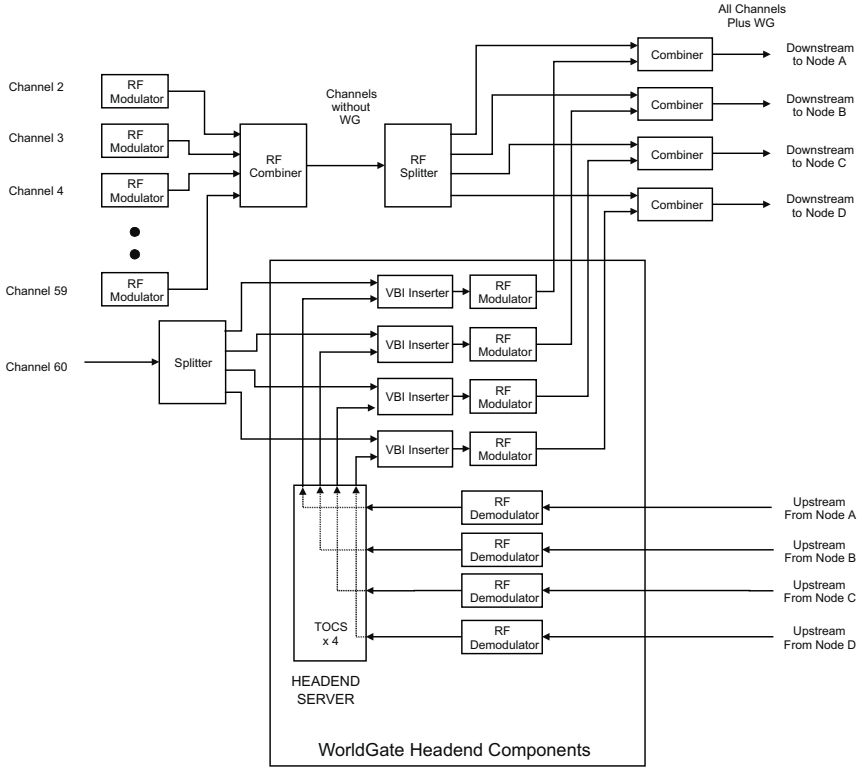

Figure 4: WorldGate Headend Data Flow

ICTV

ICTV is a system with which cable subscribers can access the Internet via a special, low-cost set-top box called the Homebox that comes equipped with an IR keyboard. The television becomes a “dumb” terminal, allowing the subscriber to access a computer in the cable headend for e-mail, web browsing and other PC applications. In the headend, a Windows NT server manages data storage and services all system software.

© SCTE

Connected via an Ethernet switch to the server are a number of Analog Control Modules, each of which has a Pentium processor. These Analog Control Modules serve to establish the connection to the subscriber's Homebox and act as a client to the NT server. The Analog Control Modules convert VGA graphics to NTSC and modulate an RF carrier. The ICTV system requires a free cable channel per user per session.

Although this may seem to use up bandwidth rapidly, ICTV claims that three cable channels can serve a 500-home node.[2] Among the advantages of ICTV are very fast internet access speed – up to 10 Mbps – and low set-up costs. ICTV would seem to be an excellent choice for subscribers who want high-speed web surfing for entertainment, but who have no home computer and no need for a full-blown cable modem.

OpenTV – Interactive TV via Direct Broadcast Satellites (DBS)

The most prominent vendor for DBS Interactive TV, OpenTV Inc., has recently announced a five-year agreement to partner with EchoStar Communications Corporation, whose DISH Direct Broadcast Satellite (DBS) Network serves more than 2 million subscribers in the United States. Direct Broadcast Satellites implement Interactive TV service much the same as one-way cable systems that have digital set-top boxes with telephony returns. The downstream data is not carried in the VBI but in an MPEG-2 data stream, and the upstream data is transmitted via a telephony modem.

OpenTV has been an industry leader overseas with more than one million homes currently using its platform for interactive television in Europe. OpenTV's software platform will enable DISH Network to offer its subscribers a variety of enhanced television services, such as an interactive electronic program guide; e-mail and Internet access for television; weather forecasts on-demand; and a variety of e-commerce services, including home banking and music merchandising. New television services will be added to EchoStar's DISH Network each year for the balance of the term of the agreement.

OpenTV provides the key software and hardware components for the development and delivery of interactive services and content to digital satellite, cable, terrestrial broadcast and other video delivery services worldwide. OpenTV includes as customers British Sky Broadcasting and British Interactive Broadcasting in the United Kingdom; Television Par Satellite, France Telecom Cable and Cable Lyonnaise in France; Telia in Sweden; TeleDanmark Kabel in Denmark; ViaDigital/Telefonica in Spain; FreeTV/ARD in Germany; Stream in Italy; and Multichoice in Greece, South Africa and the Middle East. OpenTV is a member of the Digital Video Broadcasting (DVB) project and a licensee of Personal Java from Sun Microsystems.

2 Setting up an ICTV system requires an understanding of the interactive video traffic that will be presented to the system. This process is very similar to telephony traffic engineering.

© SCTE

The OpenCable Standard and Interactive TV

OpenCable™ is an initiative of the cable television industry. OpenCable™ is being managed through CableLabs with a goal of attaining interoperable digital set-top boxes manufactured by multiple vendors. These devices would be capable of delivering digital video, data and interactive services to a television set.

The OpenCable™ initiative has a number of components. First, it is the process that will define the advanced digital devices, including set-top boxes. Second, it is a blueprint for a way of delivering a series of advanced services to consumers. Third, it is a family of cable digital devices. Fourth, it is a consumer brand. All set-top devices in the OpenCable™ family of products, which also will include VCRs, television sets and DVD players, will have the ability to offer an enhanced television viewing experience by way of some data complement to the video. In the devices that cable operators lease to customers, there may be "small footprint" software in the set-top box that communicates with a server in the cable operator headend.

In the higher-end devices that customers may buy at retail, the box may contain a fully functioning DOCSIS modem that allows high-speed, two-way Internet access via the cable plant. OpenCable™ accommodates either strategy. It also accommodates different extensions of OpenCable™ functionality that some cable operators may wish to obtain to meet their market needs.

Summary

Interactive TV represents a wide range of applications being developed by a large number of vendors. With so many players, success will hinge on the emergence of industry-wide standards. Industry groups and manufacturers recognizing this have attempted to incorporate established Internet protocols and standards into their systems, thereby reducing the amount of proprietary content and increasing the potential number of users.

Acknowledgements

SCTE and KnowledgeLink thank Walt Ciciora for permission to excerpt the "Ancillary Data" section from chapter 2 of the book *Modern Cable Television Technology, Video, Voice, and Data Communications*, by W. Ciciora, J. Farmer and D. Large.

© SCTE

Learning Just Enough to be Dangerous: Glossary

ATVEF – Advanced Television Enhancement Forum, an industry group concerned with display of television content within web pages and delivery of data-enhanced TV programming via one-way broadcast.

Client/Server Architectures – Client/server architecture is a computing model that divides applications between clients and servers. Clients are the devices whose role is to run the user interface and perform some local processing. Servers are devices that respond to specific requests by a client with specified actions, such as database queries, or network access.

Closed-Captioning – A means by which television programming may be accompanied by a VBI data channel that carries captions for the deaf and hard-of-hearing. The Electronics Industry Association has published the technical standards as EIA-608.

Latency – The time that it takes from when the data transmission starts at its origin to when it has been completely received at its destination, equal to the time per bit times the number of bits, plus the travel time.

Pull applications – Interactive services that require two-way communication for data retrieval.

Push applications – Interactive services that include data broadcast with the television programming; one-way interactive service.

Store and forward polled addressable system – A system where a set-top box stores pay-per-view purchase data until it is polled ("addressed") by a system control computer. May be upgraded to support Interactive TV.

TDMA – Time Division Multiple Access. A system that allows multiple users simultaneous access to a communications channel by synchronizing the communicating devices and then assigning time slots to particular users.

Teletext – North American Basic Teletext Specification or NABTS, published as EIA-516; a scheme for transmitting data in the Vertical Blanking Interval of NTSC television signals.

Thin Client – A client that has a low requirement for memory and other system resources.

VBI – Vertical Blanking Interval. The period of time between the moment the television raster scan reaches the bottom of the TV screen and is blanked out until the time it reaches the first line of *active* video, line 22, a period of time equal to 21 horizontal scan lines.

© SCTE

Testing Your Knowledge

1. What was the first use for data transmitted as part of a television signal?

2. What is the difference between "push" and "pull" interactive applications?

3. What are the obstacles to implementing Interactive TV via DBS?

4. What is the maximum amount of data that can be carried via an NTSC television signal?

5. What are the main subsystems in the WorldGate Headend Server?

6. What are the main subsystems in the Wink Interactive TV system?

7. What is Channel Hyperlinking™?

8. What industry groups are contributing to Interactive TV standards?

Answers to Volume 2, Issue 12 Questions

1. What is the criterion for determining where MPEG tests should be conducted? What are some test points for MPEG measurements?

   MPEG measurements are normally made up to the last point where the digital information is modified or multiplexed. As you have learned from this second volume of DigiPoints*, there will be multiple sources of digital information in a digital system. The interface between each of these sources and the operator's network meets the criterion of a measurement point.*

   The most obvious point is at the link to a digitization center. Signals that arrive via satellite or terrestrial link are often processed to change the program mix before placing them on the operator's network. Even if they were not, there is value to verifying the integrity of the MPEG content as it arrives. The output of an IRT is another potential test point, especially considering that conditional access has been added to the MPEG stream

© SCTE

at that point. The output of a video server is yet another place to test MPEG content. For some networks, video server test points may even be distributed deeper into the network than the headend (i.e., at a hub or fiber node).

2. What is the relationship of transport stream packets to packets in the elementary stream?

   Packets in the elementary stream are carried by packets in the transport stream. Both their header and payload become part of the payload of the standard 188-byte transport packet.

3. What are the stages in MPEG compression? How do the steps in compression relate to the elementary and transport streams?

   The first stage looks at the content of 8 x 8 blocks of pixels. A mathematical operation called a Discrete Cosine Transform is performed on the information in each block as the first step of compression. The result of the DCT is another matrix called the DCT block. DCT blocks are grouped into larger macroblocks. Macroblocks are components of slices that represent horizontal strips of picture information from left to right. A number of slices are combined to make the field or frame.

   The frame may be coded as I, B, or P. I frames are the reference frames for motion-based compression. They contain the entire detail of a picture. B and P frames are built from motion vectors and error blocks that reference the I frame. A new I frame is stored after some number of frames have been processed The set of frames from one I frame to the next is called a Group of Pictures (GOP). Several GOPs may be combined to form a video sequence.

   The way these stages are related to the elementary and transport streams is that the compression stages create packets, with headers that identify the particular stage of compression. These packets are carried by the elementary streams. The transport stream carries elementary stream packets, as described in the answer to question 2.

4. What are some of the advantages of using each of the following views for MPEG testing:
   - The hierarchical view?
   - The interpreted view?
   - The graphical view?

   The display of a hierarchical view is a quick way to verify that the data in a transport stream can be decoded, and to see the relationships between each of the levels of the transport stream. It provides a picture of the linkages. Each of the levels of the entire transport stream is shown as part of a cascade. Each of the streams is represented by icons. A line connects each stream's icon to the icons in the streams that compose it. The tester, therefore, does not need to mentally map PSI tables to one another because the relationships are clearly shown on the test screen.

   Interpreted views allow the technician to choose part of the stream for analysis. The screen will display the contents of the multiplex for the specified section, including the names of the fields in the multiplex view, and their contents. Some test equipment can also provide

© SCTE

the meaning of each field in the view. As a sort of bookmark, the time or byte count from the beginning of the stream might be included in the display.

Graphical views are bar, line, or pie charts of data over a period of time. They are useful for rapidly analyzing data trends, and their relationship to specified or expected values of the data.

5. What type of change to PSI tables does not represent an error?

   The PSI tables are legitimately changed when MPEG streams are remultiplexed, such as in an add-drop multiplexer.

6. Which field in the transport stream packet header contains timing information? Explain how this timing information is used to synchronize clocks in the system.

   The header adaptation field contains timing and synchronization information.

   MPEG encoders operate at a 27-MHz clock rate. The decoders operate at the same rate, but obviously, the decoder is usually physically remote from the encoder. Recovery of the intelligence in the multiplex stream depends on synchronization of both clocks. This is accomplished by sending PCR bits in the adaptation field of the transport header.

   Each of the programs in the transport stream may be coded by a different encoder. The encoder clocks drive a constantly running binary counter. The value of the counters is periodically sampled and recorded as the PCR in the header adaptation field. The same header contains a Program Identifier (PID) that is used by the decoder to match program with clock synchronization.

   At the decoder, another clock runs at 27 MHz and also sets a binary counter. The decoder compares the sampled PCR for the packets with the appropriate PID to its own binary counter, and an internal phase locked loop circuit eventually brings its own counter into synchronization with the header PCRs. The two clocks thus become synchronized. To ensure this synchronization, the MPEG standard specifies that PCRs must be sent every 100 milliseconds.

7. What are two ways of measuring jitter?

   Hewlett-Packard's MPEGscope test equipment collects 100 samples of the PCR and derives an expected time line based on the best fit of a straight line to the samples. Deviations from the time line represent jitter.

   Tektronix uses a different approach. Its MTS200 MPEG test system predicts the PCR value by using the previous PCR and the bit rate to produce an interpolated PCR, which they call the PCRI. The actual PCR is subtracted from the PCRI to give an estimate of the jitter.

8. What is the characteristic of the Sarnoff compliance bitstreams that makes them useful for MPEG decoder tests?

   Sarnoff compliance bitstreams are deterministic (able to be exactly reproduced).

© SCTE