DigiPoints

The Digital Knowledge Handbook

Volume III, Issue 12 July 13, 2001

Inside

Introduction and Review

PacketCable Architecture

- HFC Access Network
- PSTN
- Managed Internet
- The Multiple Domains of PacketCable 1.2
- Electronic Surveillance
- Keeping the Information Intact

The Protocols of PacketCable

- Grouping the Specifications by Functions

Understanding the Functional Components of PacketCable

- Access Network
- Call Management Server
- Gateways
- Audio Server Specifications
- Operations Support Systems and Network Management

Closing Comments

Learning Just Enough to Be Dangerous: Glossary

Testing Your Knowledge

Answers to Questions in *DigiPoints* Volume III, Issue 11

©2001 by the Society of Cable Telecommunications Engineers Inc. All rights reserved. *DigiPoints* is published monthly by the Society of Cable Telecommunications Engineers, 140 Philips Road, Exton, PA 19341-1318, 800-542-5040, July 13, 2001, Volume III, Issue 12. Office of publication is 140 Philips Road, Exton, PA 19341-1318. Developed by KnowledgeLink Inc.

A Practical Guide to PacketCable™

Introduction and Review

Next to DOCSIS™, PacketCable™[1] is probably the most widely used buzzword to come out of the CableLabs® organization. Most technical personnel in cable recognize that the term has a lot to do with making a cable system work with the Internet. After reading *DigiPoints* Volume III, Issue 11, you should realize that it also describes the architecture for a new type of cable network that makes it possible to offer high-quality telephony service. If you think further about new Internet applications like the streaming audio delivery that was offered by Napster, you will also realize that PacketCable architecture is an essential part of not only telephony, but also high-speed data and streaming video applications.

This issue of *DigiPoints* is a guide to the documents issued by CableLabs' PacketCable

1 PacketCable™ and DOCSIS™ are trademarks of CableLabs®. Whenever they are used in this document, the trademark is implied.

initiative. It would be far beyond its scope to be a complete tutorial on the set of documents issued by the initiative over its almost three-year life to date. Rather, this issue is a summary of the PacketCable architecture, and a background reference for technical personnel who want to learn more by reading all or part of the PacketCable specifications.

CableLabs defines PacketCable as "a CableLabs-led initiative aimed at developing interoperable interface specifications for delivering advanced, real-time multimedia services over two-way cable plant."[2] PacketCable builds the technology of the higher layer Internet Protocol on top of the layer 1 and 2 specifications of DOCSIS to make possible IP telephony, multimedia conferencing, interactive gaming, and other applications not deliverable in an analog or even constant bit rate digital network. Issue 11 discussed the Internet Protocol, the evolution of PacketCable from other standards, and the NCS 1.0 specification. This issue carries that discussion further, by examining the reference models and remaining documents developed by the PacketCable initiative. The operation of the components of the model and their interconnection is specified in the PacketCable documents, which are grouped by the areas they address in Table 12-1.

CableLabs is defining PacketCable in phases. The initial phase, PacketCable 1.0, defined a network infrastructure for basic residential IP voice services in 11 specification documents and five technical reports, including the NCS 1.0 specification summarized in *DigiPoints* Volume III, Issue 11. Although the network structure defined in 1.0 is capable of delivering telephony, it is not as robust as the Public Switched Telephone Network (PSTN), and hence could not truly be called primary line service. PacketCable 1.0 provided specifications of the end-user environment and its interface requirements to the access network, various servers, PSTN gateways, and MTA device provisioning components. In terms of the leading PacketCable application, this is the basic architecture required for the transport of voice over IP, back office support, and the feature component of IP telephony in a single-zone[3] reference architecture.

PacketCable 1.1 defined the requirements for primary line telephone service in a PacketCable architecture in three specifications and two technical reports. In terms of IP telephony, these additions specify how to achieve reliability and emergency services expected of phone service provided via the Public Switched Telephone Network.

The most recent phase, PacketCable 1.2, defines the functional components and interfaces needed for communications between PacketCable 1.0 networks using an IP infrastructure or backbone network. Within three specifications and two technical reports, it expands PacketCable to include interconnection of managed internets and how to guarantee Quality of Service across the interconnections.[4] With a PacketCable 1.2 implementation, end-to-end calls can be made across multiple PacketCable networks without the use of the PSTN.

2 *SPECS: News and Technology from CableLabs*, Volume 12, No. 3, April 2000.
3 A single zone is defined as one Call Management Server and the endpoints it manages. Essentially, this is a contained and relatively small network, typically managed by one cable operator. Completing calls to subscribers that are not served by this network requires routing through the Public Switched Telephone Network.
4 Some of the specifications defining PacketCable 1.2 are revisions of earlier documents.

© SCTE

As you may have already noticed, although PacketCable has a broader focus than IP telephony, its design is rich in telephony legacy. This is because the Public Switched Telephone Network (PSTN) is the core network for both voice and data transport, and also because IP telephony has been the leading packet network application in the cable industry.

In addition to being a comprehensive framework for development of cable packet networks, the PacketCable specifications can be excellent practical references on packet switched technology. Their use as references is easier if certain terms are first understood. We have, therefore, structured this issue as a guide that provides background knowledge helpful to understanding and applying the PacketCable documents. In some cases, we provide basic definitions of terms and concepts that are simple enough to explain with short paragraphs of text. When a concept is more complex than a paragraph or two of text, we refer to either previous issues of *DigiPoints*, where more detailed explanations can be found, or to a source document.

PacketCable Architecture

We mentioned in Issue 11 that PacketCable is CableLabs' model for a managed internet. Perhaps a more accurate statement is that PacketCable *includes* that model, because its reference architecture is actually three networks. The reference architecture extends from the customer premises to the Public Switched Telephone Network, with the managed internet in between (see Figure 12-1).[5]

HFC Access Network

On the customer premises end, the connection to the managed network is the DOCSIS-compliant HFC access network. The PacketCable 1.0 Architecture Framework Technical Report defines the DOCSIS-compliant HFC access network as including cable modems, Multimedia Terminal Adapters (MTAs), and Cable Modem Termination Systems (CMTSs).

Cable modems are defined by DOCSIS. It provides services such as modulation/demodulation, data transmission using the DOCSIS protocol, and classification of traffic.

MTAs are client devices that contain a subscriber-side interface to Customer Premises Equipment (CPE), and a network side interface to call control elements in the network. They are located at a customer site, and provide the codec, signaling, and encapsulation functions needed

5 It is interesting that the architects of PacketCable chose to illustrate how the model interconnects with the rest of the world by including the PSTN in the reference architecture. Although this interconnection is essential to carrier class telephony service, other networks must also interconnect to a PacketCable-compliant network. The best example is the public Internet (the one with the capital *I*).

© SCTE

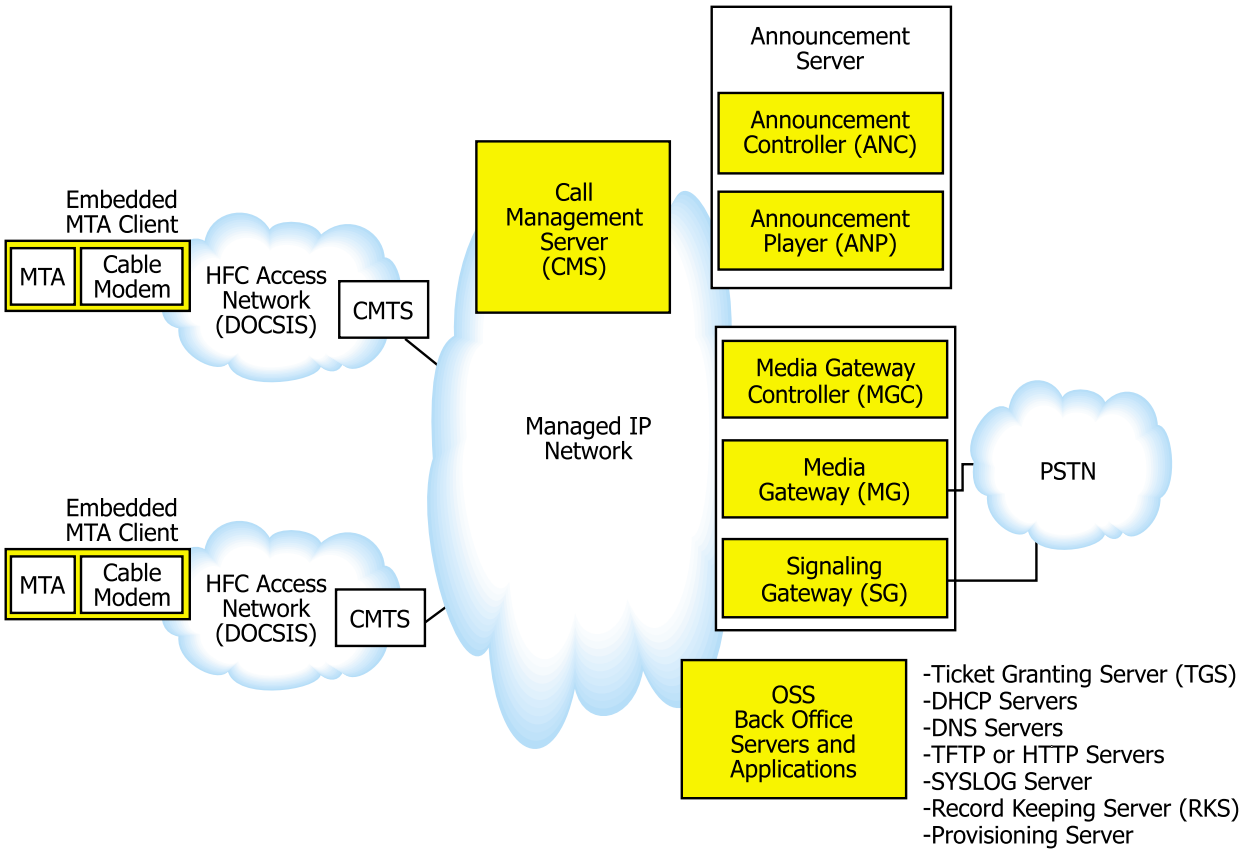

Figure 12-1: PacketCable 1.0 Reference Architecture

to set up a call and convert analog information to compressed, packetized digital information which can be sent over a packet internet. MTAs are part of the NCS 1.0 specification that was discussed in *DigiPoints* Volume III, Issue 11.

CMTSs are the workhorses of the DOCSIS access network. In addition to providing the modulation and demodulation necessary to interface RF transport media to a digital internet, CMTS tasks include:

- Providing the Quality of Service to cable modems specified by network policies[6]
- Allocating upstream bandwidth
- Classifying network-side arriving packets by Quality of Service
- Policing and altering Type of Service (TOS) fields in packets to enforce network policies
- Forwarding upstream and downstream packets using the assigned Quality of Service
- Performing traffic shaping to satisfy network data flow specifications
- Recording usage of resources per call

6 *Policy* is a data communications term that signifies how individual data flows are to be moved through a network. It includes the mechanism for restricting flows for security, traffic, or revenue-generation reasons.

PSTN

The PSTN is the incumbent telephone network. This is a complex network consisting of the switches, transmission media, and cross-connections that are used to complete voice calls. The PSTN itself is actually two separate networks: a bearer network that transports call content, and a packet network used for signaling to facilitate connections across the bearer network. The current implementation of the signaling network is called Signaling System 7 (SS7).[7] In addition to data switches, it contains databases that provide network-based features to the PSTN, such as 800 service and number portability.

Managed Internet

The managed internet includes the data switches and routers needed to transport IP packets, and components needed for signaling, provisioning, quality of service guarantee, and announcements.

Information transport between the access network and the PSTN is accomplished through the PSTN gateway, which consists of three functional components: the Signaling Gateway, the Media Gateway, and the Media Gateway Controller. These three components are logical, rather than physical, entities, and can be combined into one or more physical hardware components.[8]

The Signaling Gateway provides an interface with the PSTN's SS7 network, to aid in the establishment of connections required during calls. The Media Gateway provides bearer (call content) connectivity between the PacketCable network and the PSTN. It thus supervises and controls the physical circuits between the parties of a call. The Media Gateway Controller receives and mediates call-signaling information between the PacketCable network and the PSTN. It maintains and controls the overall call state for calls requiring PSTN interconnection. It controls the Media Gateway by instructing it to create, modify, and delete connections that support the media stream over the IP network.

In addition to being the transport bridge between the access network and the PSTN, the managed network must also emulate many PSTN functions for the access network. It must perform call setup tasks that support the call control tasks of the PSTN gateway, call servicing, and operations support. These tasks are implemented in Call Management Servers, announcement servers, and Operations System Support (OSS) servers, respectively.

Call Management Servers provide call control and signaling related services for MTAs, CMTSs, and PSTN gateways. It is important to understand that the call agent described in the NCS protocol resides in the CMS. Per PKT-ARCH 1.2V01-001229, the call agent is the part of the CMS that maintains the communication state, and controls the line side of the communication.

7 SS7 was discussed in detail in the SCTE textbook *DigiPoints Volume One*, Chapter 9.
8 The difference between logical and physical entities is discussed in *DigiPoints* Volume III, Issue 11.

© SCTE

Announcement servers are the managed internet's alternative to the components of a PSTN telephony switch that supply tones and announcements. Announcement servers contain two sub-components: media players and media player controllers.

Operations Support System servers provide fault management, configuration management, accounting management, performance management, and security management. These functions are collectively known as FCAPS, an acronym formed by the first letters of each of the functions. *DigiPoints Volume Two*, Chapter 10, discusses FCAPS in detail.

The Multiple Domains of PacketCable 1.2

As IP applications proliferate, the communications needs of users will extend beyond the network owned and operated by any one service provider. In some cases, even a single service provider may operate multiple IP networks, and it will be necessary to complete IP calls across those network boundaries.[9] PacketCable 1.2 addresses the way that IP traffic can be moved in packet form across these multiple service provider networks.

Figure 12-2 from the PacketCable 1.2 Architecture Framework Technical Report illustrates an architecture with multiple networks. In this diagram, a PacketCable zone is defined as a single CMS and the MTAs it manages. A security realm is a set of one or more zones managed as a single entity for security and routing. A domain is the set of security realms managed by a single administrative and/or legal entity.

9 The term *call* will be used in this issue to describe any IP session involving transfer of information between end users. In this sense, an IP telephony call is a subset of all the call types that can be completed. Examples of other types are a streaming video or data session.

© SCTE

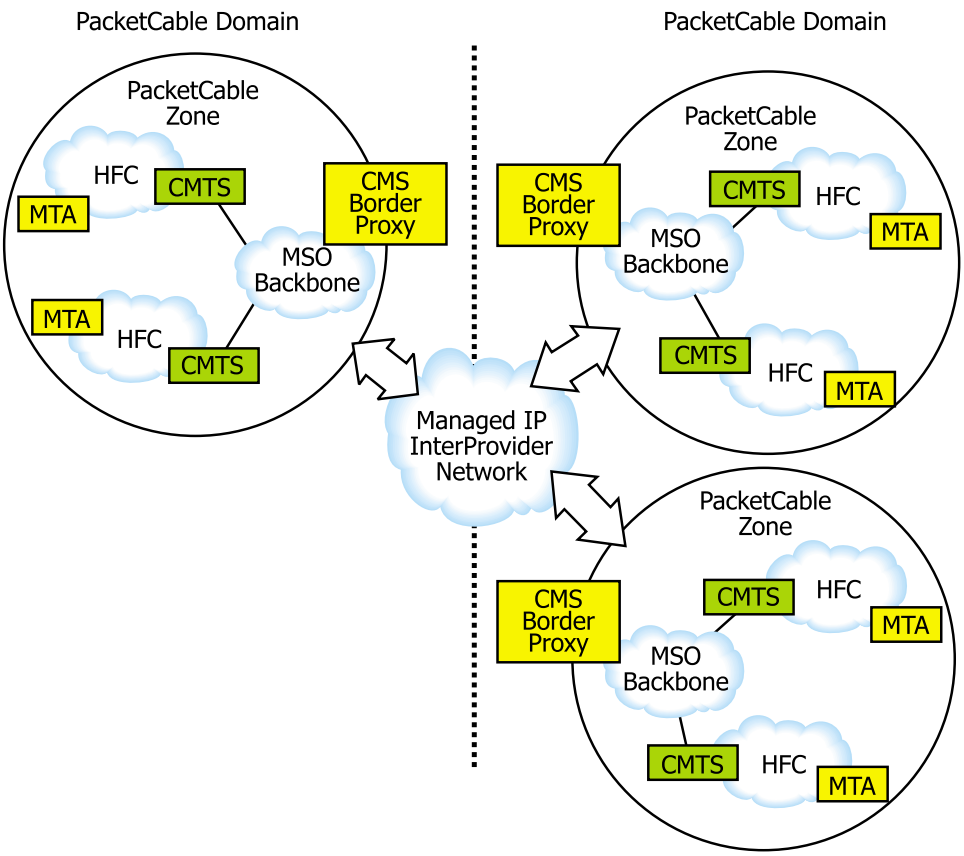

Source: PacketCable 1.2 Architecture Framework Technical Report, p. 24

Figure 12-2: PacketCable 1.2 Reference Architecture

Within this architecture, a Border Proxy (BP) is a signaling component that exchanges call information between domains or between realms within domains. A Border Proxy may act as a call router, signaling transformation gateway, signaling firewall, or any subset of these functions. Border Proxies between two realms in the same domain are called Interior Border Proxies. Those at the boundary between two domains are called Exterior Border Proxies.

Electronic Surveillance

The capability to do lawful electronic surveillance is required of telecommunications carriers providing telecommunications services to the public for hire. When a company operating a PacketCable network is classified as a telecommunications carrier for purposes of the Communications Assistance for Law Enforcement Act (CALEA), it must provide the means for law enforcement agencies to conduct electronic surveillance. PacketCable specification PKT-SP-ESP-I01-991229 PacketCable™ Electronic Surveillance describes how this is to be done.

Keeping the Information Intact

To complete the topic of architecture and signal flow in a PacketCable network, it is necessary to discuss two concepts associated with end-to-end signal flows in a PacketCable managed internet: Quality of service and security.

Quality of Service (QoS) is the mechanism that ensures certain types of packets have priority in routing across an IP network. QoS is typically accomplished by setting bits in the packet header to indicate the priority of the particular packet. Multiple headers may be ultimately involved in setting end-to-end QoS. Information in a layer 2 header, for example, may need to be extracted and added to a layer 4 header as packets move outside the service provider's network on a backbone connection between networks.[10]

PacketCable provides for Dynamic Quality of Service (DQoS), which uses call-signaling information at the time the call is made to dynamically assign network resources to the packets that make up the call. This method is better than a static (provisioned) assignment of QoS, because it allows the service provider to associate any of several priorities to calls by any given end user. This mechanism optimizes bandwidth usage. One other benefit is that different grades of service can be provided for the various service subscriptions by the end user at different costs.

The Inter-Domain Quality of Service (IQoS) specification defines how to extend QoS across a managed IP transport or backbone network—the portion of the network between the local CMTS and the remote CMTS. Because it is expected that there will be a variety of backbone transport providers, each with their own network topologies and protocols, PacketCable 1.2 defines how both coarse grained (DiffServ) and fine grained (per flow RSVP and aggregated RSVP) approaches can be used to manage network resources.

Security is built into the PacketCable specifications to prevent theft of service and malicious attacks by hackers or others seeking to destroy network operation. Trust is an important security concept. An entity is said to be trusted when it is completely under the control of the managing service provider, and only that service provider. In this context, an untrusted entity is one that is subject to an attack that changes its software code. Such an attack can be done by professional hackers, or by parties that legitimately control the untrusted entity. An example of a breach of security by the parties that legitimately control an untrusted entity would be changes made to the code in an MTA by a customer.

Distribution of security "keys" is essential to PacketCable security.[11] A specific type of key distribution system, known as Kerberos Key Distribution, is specified. The Kerberos Key Distribution Center, formerly called the Ticket Granting Server, is the focal point of PacketCable security and key distribution.[12]

10 The layers referred to here are those of a protocol model, such as the OSI reference model. Layered protocol models are discussed in *DigiPoints Volume One*, Chapter 7.

11 Security and keys are discussed in *DigiPoints Volume Two*, Chapter 7. Although that reference was developed to explain conditional access, the concepts of encryption and public/private keys also pertain to PacketCable.

12 Kerberos security is described in detail in IETF RFC 1510.

© SCTE

The Protocols of PacketCable

The PacketCable initiative drew heavily from existing standards and protocol specifications. In *DigiPoints* Volume III, Issue 11, we discussed some key points of the NCS 1.0 protocol that defines communications between simple residential endpoints and call agents. In this issue, we will discuss the Trunking Gateway Control Protocol (TGCP), which similarly defines communications between simple trunk gateways to the PSTN and Media Gateway Controllers. Both of these protocols are based on the Media Gateway Control Protocol (MGCP).

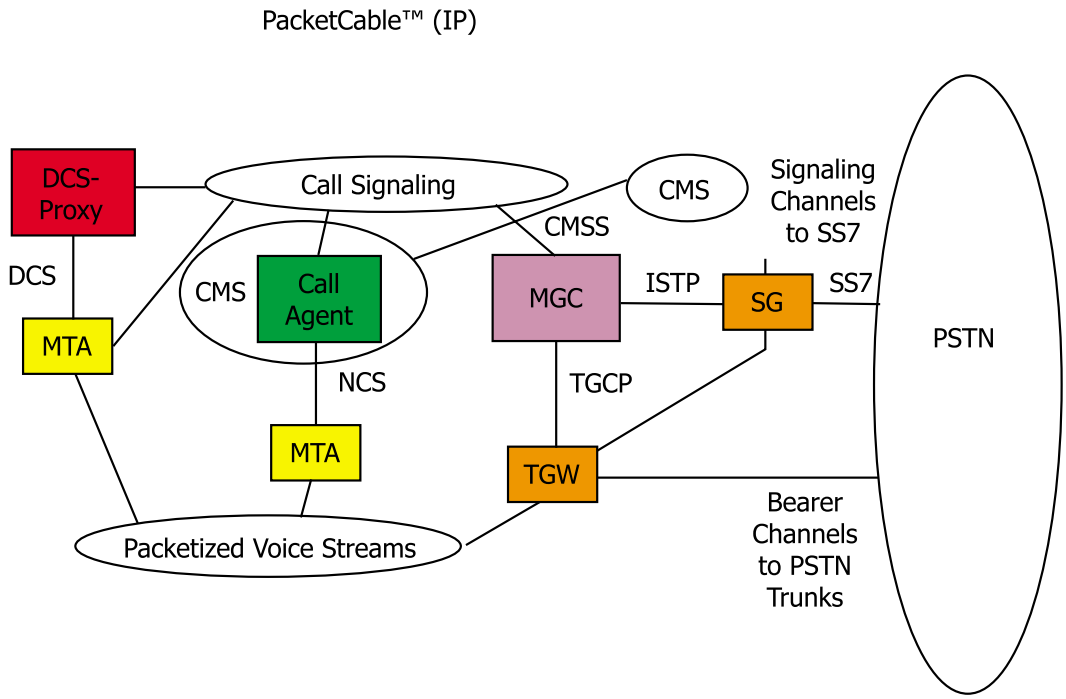

Figure 12-3: PacketCable Protocols

Signaling between the Call Management Servers (CMS) that contain NCS call agents is governed by the Call Management Server Signaling (CMSS) protocol, which is based on the Session Initiation Protocol (SIP). In addition to these protocols, PacketCable also includes a Distributed Call Signaling (DCS) protocol, which is also a modification of SIP. PacketCable NCS systems hold all of the call state information in network servers, such as the CMS, while DCS systems distribute call state information throughout the network and put much of it at endpoint devices.

The details of SIP are beyond the scope of this issue of *DigiPoints*. However, it is helpful to know the following definitions of SIP entities:

- A client initiates requests and sessions (e.g., a telephone call)
- A server responds to requests (e.g., terminate a call)
- A user-agent performs either role as required in the context of a call.

© SCTE

Signaling between the SS7 network used by the PSTN to set up calls and PacketCable Signaling Gateways is performed using the Internet Signaling Transport Protocol (ISTP). ISTP is discussed further in the section of this issue that covers Gateways.

Figure 12-3 illustrates the relationships between PacketCable components and the associated protocols.

A large part of the text of the PacketCable specifications NCS 1.0, TGCP, and CMSS describes how to name network elements and construct messages between them. This information is necessary for system architects, designers, and network managers, but is beyond the scope of daily activity for the majority of cable technical support personnel. For that reason, this issue of *DigiPoints* will focus more on the functions of PacketCable components, and the definition of some common terms used in the specifications.

However, it is worth noting that there are some general rules for naming and messaging. The names of network elements and endpoints generally conform to a similar structure to that used with switches, routers, and other devices on the Internet. For example, the format for an endpoint, such as a gateway, is “local endpoint name@domain name.” The result is an endpoint name like “mytrunkinggateway@servers.com.” This naming convention facilitates the direction of messages and commands to appropriate entities on the network.

Grouping the Specifications by Functions

In preparation for beginning the next section of this issue, it will be helpful to group the PacketCable documents into documents covering architecture/signal flow and five functional categories that correlate to the parts of the architecture we have discussed. Table 12-1 is based upon that correlation.

Category	**Specification or Technical Report**	**Subject**	**PacketCable Phase**
Architecture and End-to-End Signal Flow	Technical Report PKT-TR-ARCH-V01-991201	PacketCable™ 1.0 Architecture Framework	1.0
	Specification PKT-SP-EC-MGCP-I02-991201	PacketCable™ Network-Based Call Signaling Protocol	1.0
	Specification PKT-SP-IQOS-I01-001128	PacketCable™ Interdomain Quality of Service	1.2
	Specification PKT-SP-DQOS-I02-000818	PacketCable Dynamic Quality-of-Service	1.0

© SCTE

	Specification PKT-SP-SEC-I02-001229	PacketCable Security	1.0, 1.2
	Specification PKT-SP-ESP-I01-991229	PacketCable Electronic Surveillance Specification	1.1
	Technical Report PKT-TR-ARCH 1.2-VO1-001229	PacketCable 1.2 Architecture Framework	1.2
	Technical Report—On-Net MTA to On-Net MTA PKT-TR-CF-ON-ON-V01-991201	PacketCable Architecture Call Flows	1.0
	Technical Report—On-Net MTA to PSTN Telephone PKT-TR-CF-ON-PSTN-V01-991201	PacketCable Architecture Call Flows	1.0
	Technical Report—PSTN Telephone to On-Net MTA PKT-TR-CF-PSTN-ON-V01-991201	PacketCable Architecture Call Flows	1.0
	Technical Report PKT-TR-VOIPAR-VO1-001128	VoIP Availability and Reliability Model for the PacketCable Architecture	1.1
Access Network	Specification PKT-SP-EMTA-PRIMARY-I01-001128	PacketCable Embedded MTA Primary Line Support	1.1
	Specification PKT-SP-CODEC-I01-991201	PacketCable Audio/Video Codecs	1.0
Call Management Server	Specification PKT-SP-CMSS-I01-001128	PacketCable Call Management Server Signaling	1.2
Gateways	Specification PKT-SP-TGCP-I01-991201	PacketCable PSTN Gateway Call Signaling Protocol	1.0

© SCTE

	Specification PKT-SP-ISTP-I01-991201	PacketCable Internet Signaling Transport Protocol (ISTP)	1.0
Audio Server	Specification PKT-SP-ASP-I01-001128	PacketCable Audio Server Protocol	1.1
	Technical Report PKT-TR-ARCH-AS-V01-001128	PacketCable Audio Server Architecture	1.1
Operations Support Systems and Network Management	Specification PKT-SP-EM-I02-001128	PacketCable Event Message	1.0, 1.2
	Mechanism PKT-SP-MEM-I01-001128	PacketCable Management Event	1.1
	Specification PKT-SP-MIB-NCS-I01-991201	PacketCable NCS MIB	1.0
	Specification PKT-SP-MIBS-I01-991201	PacketCable MIBs Framework	1.0
	Specification PKT-SP-PROV-I01-991201	PacketCable MTA Device Provisioning	1.0
	Technical Report PKT-TR-MEMEVENT-ID-V01 -001128	PacketCable Management Event Identifiers	1.1
	Technical Report PKT-TR-OSS-V02-991201	PacketCable OSS Overview	1.0
	Specification PKT-SP-MIB-MTA-I02-010323	PacketCable MTA MIB	1.0
	Specification PKT-SP-MIB-SIG-I02-010323	PacketCable Signaling MIB	1.0

Table 12-1: PacketCable Specification Documents

© SCTE

Understanding the Functional Components of PacketCable

In this section, we will move beyond the general architecture of PacketCable, and discuss how its documents address some functional areas. The topics we will cover are those that were shown in Table 12-1 in categories other than Architecture and End-to-End Signal Flow.

Access Network

As of 1Q01, there are two specifications that pertain to the HFC access network: Audio-video codecs and embedded MTA primary line support.

Audio Video Codec Specification

It is important to understand the basic purpose of a codec before reading this specification. Codecs not only code and decode (analog to digital and vice-versa). They also compress and decompress digital information. The type of codec determines a number of key factors that affect the quality of data communication, such as bit rate, frame size, packets per frame, and delay in transmission.[13] Table 12-2 is a summary of some of those key factors for the three codecs supported or recommended for support in the specification.

The base audio codec specified is G.711, which is the only one required to be implemented in a PacketCable MTA. Although not mandatory, the spec recommends the MTA be able to support at least one of codecs G.728 and G.729 Annex E. In fact, the specification requires memory to be provided to support those codecs simultaneously with G.711, even when they are not provided.

Standards Body	ITU	ITU	ITU
Recommendation	G.711	G.728	G.729A
Codec Type	Compounded PCM	LD-CELP	CS-ACELP
Dates	1972	1992/4	1996
Bit rate	64 kb/s	16 kb/s	8 kb/s
Peak Quality	Toll	Toll	Toll
Background Noise	Toll	Toll	≤Toll
Tandems	Toll	Toll	<Toll

13 The compression provided by several standard codecs was discussed in *DigiPoints Volume Two*, Chapter 9, pp. 203–204.

© SCTE

Frame Erasures	No mechanism	3%	3%
Complexity (MIPS)	<<1	~30	≤11
RAM	1 byte	2 kbytes	2 kbytes
Frame Size	0.125 ms	0.625 ms	10 ms
Look Ahead	0	0	5 ms
Codec Delay	0.25 ms	1.25 ms	25 ms

Source: Appendix A, PKT-SP-CODEC-I01-991201, p. 26.

Table 12-2: Codec Comparisons

Specification PKT-SP-CODEC-I01-991201also identifies and describes the audio and video codecs that will be applied in future PacketCable networks. Although the specification title includes both audio and video, the specification readily admits that audio applications are going to be implemented first, and that video is a "nascent" application. In fact, there are two types of MTA: MTA and MTA-2. Only the MTA-2 offers video in addition to audio communication.

The specification discusses some factors that must be controlled to keep voice quality within acceptable limits. Subjective testing of voice quality with groups of typical listeners indicates that packet loss must be less than 3 percent to meet the standard for toll quality voice.[14] Latency, which is the delay between sending and receiving a packet, must also be minimized.[15] Latency can be reduced by minimizing packing (storing a number of audio sample frames in buffers prior to packetizing). By keeping packet size between 10 and 30 msec., packing is controlled, and the negative effect of lost packets is also reduced. Further improvements in latency can be made by avoiding transcoding, which is the transformation of signals into different codec formats at network edges. Bandwidth, software upgrades, and compatibility with traditional PSTN features are also discussed. Voice Activity Detection (VAD) and Variable Bit Rate (VBR) encoding may be used to minimize the amount of bandwidth required by a codec. MTAs containing PacketCable codecs must be capable of downloading new software. Such a download would typically enhance the MTA operation, including codec performance. Audio

14 This quality measurement is known as the Mean Opinion Score (MOS). A 3 percent packet loss equates to a drop of 0.5 on an MOS scale of 5.

15 A model for network delay budgets in the PacketCable 1.0 Architectural Framework Technical Report PKT-TR-ARCH-V01-991201 indicates the network design goal should be less than or equal to 300 msec. round trip end to end.

© SCTE

codecs must support certain key features required for telephony, including general signal detection, Dual Tone Multi-frequency signaling, fax, analog modem, echo compensation, and hearing-impaired support.

Since video applications are evolving, this specification's goal is to clarify minimum video requirements for the most current or anticipated interactive video applications. The H.261, H.263, and H.245 standards are used as the basis for the video part of the specification.

Embedded MTA Primary Line Support

An embedded MTA is a DOCSIS cable modem integrated with a PacketCable MTA. Primary line service refers to service that is sufficiently reliable to meet consumer expectations for constant availability, including times when the consumer's commercial power is out. In addition, primary line service must provide access to emergency services, such as 911, both during normal operation, and during power outages.

When reading the PKT-SP-SP-EMTA-PRIMARY specification, it helps to remember that an MTA can be implemented in hardware in different ways. One of those implementations is as an evolved Network Interface Unit that mounts on the side of a residence.

Figure 12-4 is a functional representation of an embedded MTA, per the specification. The reader should note that this diagram is a protocol-oriented description, similar to the

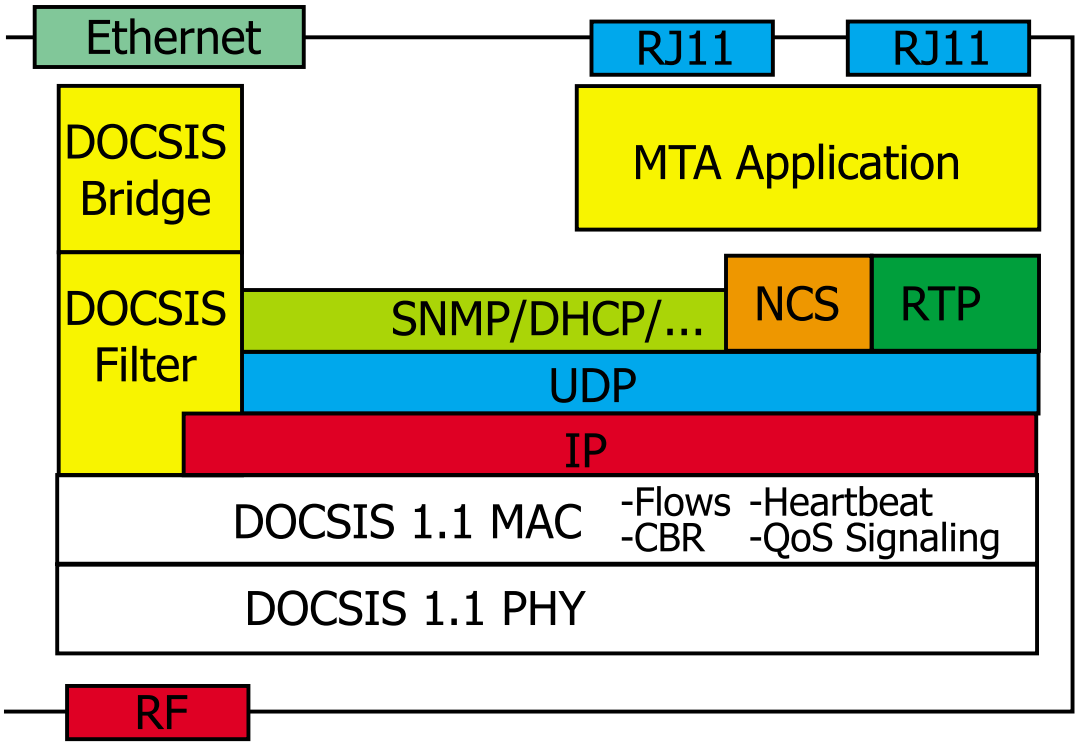

Figure 12-4: Embedded MTA

OSI reference model. These functional blocks are implemented in software, firmware, and hardware as strings of instructions or other information. Adjacent placement of functional blocks on the diagram means that the adjacent protocols provide services for each other.

Line Number	**MTA Line 1**	**MTA Line 2**	**MTA Line 3**	**MTA Line 4**	**Cable Modem Data**
Assumed Use	**Voice**	**Modem/Voice**	**Voice/ Fax**	**Voice**	**High Speed Data**
CCS	**4**	**4**	**2**	**2**	**4**
Line Penetration (Normalized by Penetration)	**100%**	**80%**	**50%**	**25%**	**25%**
Average Ringing Period	**14 sec.**	**14 sec.**	**14 sec.**	**14 sec.**	**N/A**
Average Call Length CN/MTA w/o data service	**5 min.**	**26 min.**	**5 min.**	**5 min.**	**N/A**
Average Call Length CN/MTA with data service	**5 min.**	**5 min.**	**5 min.**	**5 min.**	**N/A**
Average data rate to subscriber	**N/A**	**N/A**	**N/A**	**N/A**	**100kb/s**
Average data rate from subscriber	**N/A**	**N/A**	**N/A**	**N/A**	**10 kb/s**

Source: Table 2, p. 16, from SPEC PKT-SP-SP-EMTA-PRIMARY

Table 12-3: Traffic Engineering for the MTA

The specification describes the minimum signaling required to support analog telephony on the subscriber side of the MTA, and defines monitoring, alarms, telemetry, and powering requirements. Much of the terminology used in the specification comes from the Telcordia TA-909 specification, which was developed to describe a telephone company's solution for replacing copper twisted pair with fiber in the local loop. Because of this, it also helps to remain aware that when the PacketCable specification refers to "loop," in reality it is referring to inside wiring, rather than the media between the customer premises and the headend or central office.

Four categories of signaling are discussed in this specification:

- Loop start signaling
- General supervision
- General ringing
- Voice grade analog transmission

In general, the first three categories of signaling are concerned with call setup and maintaining the connection. The fourth, voice-grade analog transmission, describes what parameters must be met to provide PSTN quality voice transmission between the MTA and the customer station set. To clarify this point, voice-grade analog transmission in this specification is a separate issue from the issues involved in how packets flow through a network. Although those issues affect the quality of voice transmission, they are beyond the control of the MTA.

PKT-SP-SP-EMTA-PRIMARY also contains some interesting traffic engineering assumptions that are helpful in understanding packet telephony. (See Table 12-3.) The section on power requirements contains a traffic model, which provides some guidelines on expected customer subscriptions to each of the four available telephony lines, with corresponding call lengths, as well as expected data usage on the cable modem. Although the intent of the specification is to use this model for engineering a system power plant, the model is also useful when considering requirements for CMTS capacity and in the development of business plan models.

Call Management Server

The major topic discussed in PKT-SP-CMSS-I01-001128 is the set of modifications to the Session Initiation Protocol (SIP), which defines CMS to CMS signaling. The signaling between CMSs is defined by these modified SIP messages, which are forms of packets sent between the CMSs. The collection of modifications is called the Call Management Server Signaling (CMSS).

Understanding the details of the modifications requires a detailed understanding of SIP, which is beyond the scope of this issue of *DigiPoints*. Readers interested in learning more about SIP are referred to the various IETF documents covering this topic.[16]

16 These documents are available at http://www.ietf.org/rfc/ on the Internet.

© SCTE

We have discussed the general functions of a CMS earlier, in the Architecture section. This specification adds some details. Specifically, to support telephony, a CMS must:

- Provide security controls called authentication and authorization
- Provide name/number translation and call routing (dialed phone numbers to IP addresses)[17]
- Provide service specific admissions control (e.g., priority routing for emergency calls)
- Provide signaling and service feature support (3-way calling, caller ID, etc.)

Most of the CMS to CMS Signaling Specification covers the construction of the packetized messages that constitute the signaling between CMSs. This includes signaling between CMSs residing in one service provider's network, and between the CMSs in the networks of separate service providers. While SIP is the basis for CMS to CMS signaling, it is important to remember that it is not the only signaling used by a CMS. Signaling between CMSs, endpoints, and gateways is done using the NCS 1.0 protocol, which is based upon the MGCP protocol.

This specification includes descriptions of how SIP can be modified or "extended" to provide for certain enhanced, multimedia based forms of telephony. The term DCS (Distributed Call Signaling) is used to identify certain of these extensions that pertain to intelligent endpoints. As of 4Q00,however, PacketCable 1.2 supports only NCS based endpoints, and the DCS extensions are only provided for future reference.

The CMS to CMS signaling works together with PacketCable Dynamic Quality of Service (DQoS) to manage resources across cable networks. The coordination between call signaling and DQoS protocols ensures that users are authenticated and authorized before receiving access to the enhanced QoS associated with end-to-end telephony calls. Effectively, CMS to CMS signaling is the mechanism that ensures the end-to-end QoS required for telephony quality voice conversation, including acceptable levels of delay, latency, and jitter.

Gateways

PacketCable PSTN gateways are also called trunking gateways. A trunking gateway is a network element that provides analog, emulated analog, or digital bearer and channel associated signaling trunk access to a voice over IP network. PacketCable 1.2 supports SS7 and MF trunks on a combined Equal Access End Office/Access Tandem. This includes standard bearer trunks, operator services trunks, and E911 trunks.

Recall that a trunking gateway consists of three functional components: the Signaling Gateway, the Media Gateway, and the Media Gateway Controller. Call control is done outside the media gateway by a Media Gateway Controller (MGC), and during a call, a gateway may receive its control from multiple MGCs, although only one is in control at any given time. Similar to the

17 Recall that this is the same function provided by an H.323 Gatekeeper (*DigiPoints Volume Two,* Chapter 9).

way NCS call agents work with MTAs, MGCs instruct gateways to create connections between endpoints and to detect events and generate signals.

Two specifications address the signaling between PSTN gateway components and the rest of the architecture involved in a packet call. PKT-SP-TGCP-I01-991201 describes the Media Gateway Control Interface (MGCI) and the associated protocol for controlling Voice over IP PSTN gateways from Media Gateway Controllers. The protocol is called PacketCable Trunking Gateway Control Protocol (TGCP), and, like NCS1.0, is a modification of MGCP. PKT-SP-ISTP-I01-991201 describes the signaling between a signaling gateway and a Signaling System 7 (SS7) network. The associated protocol is called the Internet Signaling Transport Protocol (ISTP).[18]

PKT-SP-TGCP-I01-991201—PacketCable Trunking Gateway Control Protocol (TGCP)

The specification discusses in detail the trunk gateway protocol rules for designating endpoints, creating connections, detecting events, and signaling. These details are beyond the daily scope of most cable technical personnel, so they will not be discussed in this issue. However, as an introduction, we are providing some examples of their practical implementation for future reference.

Endpoints are sources or sinks of data. For a trunking gateway, an example of an endpoint name is ds, signifying a DS-0 trunk. The complete endpoint name consists of a series of terms, separated by a slash that describes a physical hierarchy within the gateway; for example: ds/oc3-#/ds3-#/ds1-#/#, where # and the unit name (e.g., oc3-#) indicate a specific decimal number used to reference the particular instance of the hierarchy unit. Connections are point to point, and are grouped in calls. A connection name is a hexadecimal string of digits, up to 32 characters long, and must be associated with an endpoint. An event is something that occurs in the process of a call. An example of an event is “off-hook,” and a corresponding signal might be “ringback.” Events and signals are grouped into packages, which are collections of events and signals supported by a particular endpoint type. An example of a package is “ISUP trunk,” which is associated with DS-0 endpoints, and is named IT.

Completing a Call

One of the most valuable learning tools in the TGCP specification is an illustration of the interactions between a trunking gateway and various other components of a PacketCable network during call completion. This diagram shows the flows between the various components of a PacketCable network during a typical call. It is reproduced below as Figure 12-5, with an abbreviated description of the call flow it describes. *DigiPoints* readers are referred to the actual specification for more detail on the messages that implement the illustrated call flow.

To begin the call, the MTA provides an indication to the Media Gateway Controller that it needs to establish a connection to an E.164 telephone number (e.g., 1-708-555-1212), and includes a

18 As a refresher, the reader may want to review *DigiPoints Volume One*, Chapter 9, pp. 206–209, which covers SS7.

session description with its request. The CMS looks up the requested E.164 number and determines that it needs to place an off-net call. It, therefore, contacts the appropriate Media Gateway Controller. The MGC decides it needs to place the call through a particular trunking gateway. It also decides that a continuity test should be performed for the call.

The trunking gateway is instructed to start the continuity test and to look for the outcome of the test and report it. The continuity test involves creating an inactive connection on the endpoint specified using G.711 with a packetization period of 10 ms. The trunking gateway acknowledges the request to start the test, and adds its own parameters, such as address, ports, and RTP profile.

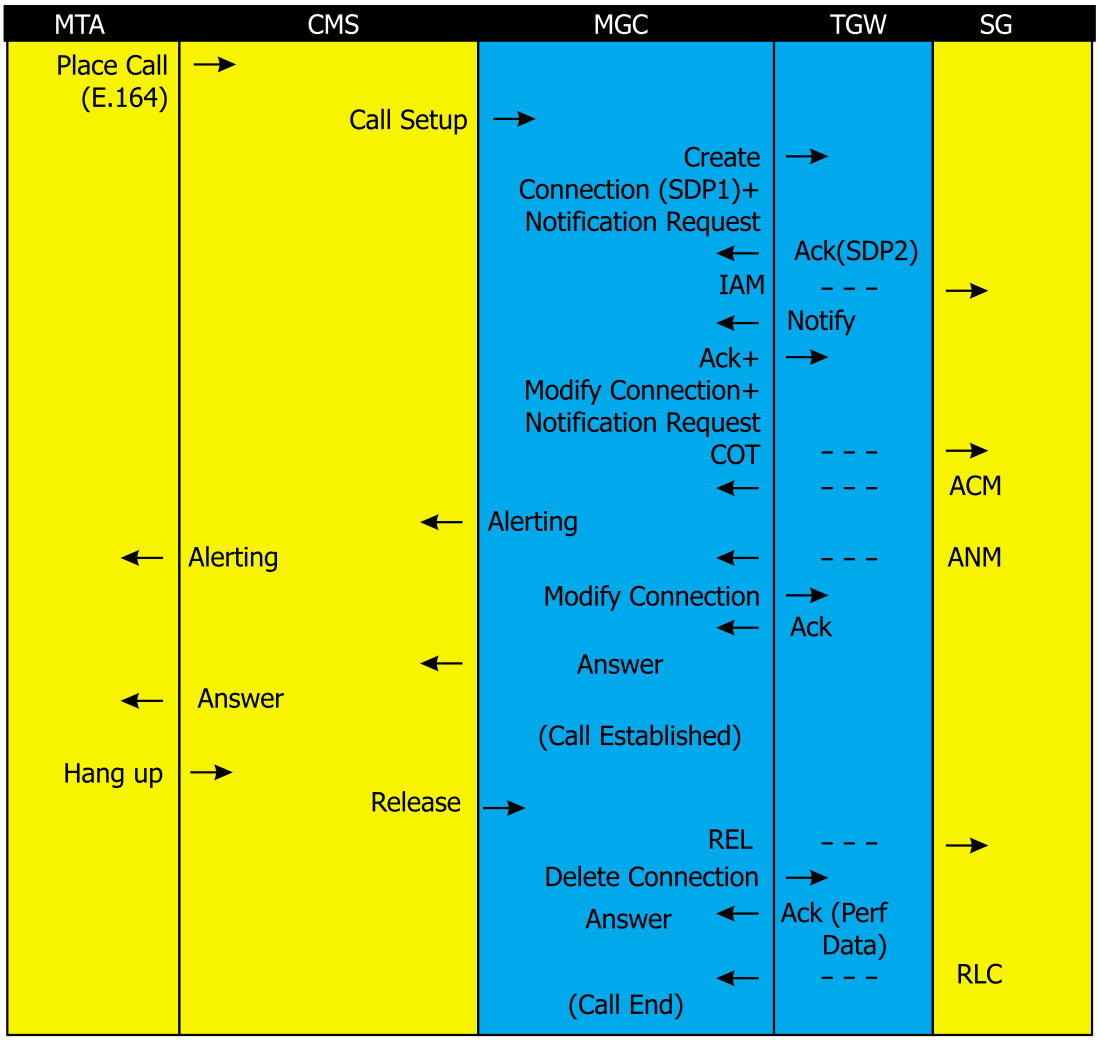

Source: PKT-SP-TGCP-I01-991201, Appendix D

Figure 12-5: Typical Call Flow

The Media Gateway Controller sends an SS7 IAM (Initial Address Message) through the signaling gateway to the switch connected to the trunk on which the call is being placed. The message includes an indication that a continuity test is being performed.

When the test succeeds, the Media Gateway Controller sends an SS7 COT (Continuity Test Message) to the remote switch, indicating the continuity test is successful, and acknowledges (ACK) the previous NOTIFY command it received. Within the ACK message, it instructs the gateway to place the connection in receive-only mode and check for fax and modem tones. At this point, the Media Gateway Controller has established a half-duplex connection, and the phone attached to the incoming (called) MTA will be able to receive the signals, such as tones and announcements, that will be generated when the called party answers the phone.

The Media Gateway Controller then receives an SS7 ACM (Address Complete Message) indicating the called party is being alerted, and then an SS7 ANM (Answer Message) indicating the called party has answered. The Media Gateway Controller then places the connection in full duplex mode by sending a Modify Connection command to the trunking gateway. While the trunking gateway responds, the Media Gateway Controller informs the originating MTA about the call answer event, and records the call answer time. The call is now established.

When the calling party hangs up, a hang-up event is sent to the Media Gateway Controller instructing it that the call should end. The MGC verifies there is no reason to hold the facility, and sends an SS7 REL (Release Message) to the remote switch, and a DeleteConnection command to the trunking gateway. The trunking gateway responds with an acknowledgement, and a confirmation that the call tear down is received by the Media Gateway Controller in the form of an SS7 RLC (Release Complete) message. The Media Gateway Controller then records the end of the call.

PKT-SP-ISTP-I01-991201—Internet Signaling Transport Protocol (ISTP)

This specification defines the messages and procedures for transporting SS7 ISUP, TCAP, and TUP messages between the PacketCable call control entities (Media Gateway Controller and Call Management Server) and the SS7 Signaling Gateway. It specifies functions similar to those performed by the SS7 Message Transport Protocol 3 (MTP3) and the Signaling Connection and Control Protocol (SCCP).

To manage network trunks and obtain public data in the PSTN, SS7 signaling information is exchanged with the PSTN via the signaling gateway. In this way, IP-based elements can use SS7 messaging to manage and access PSTN resources. Network user packet transport (bearer traffic) is independent of the signaling gateway; the signaling gateway is only concerned with the connection used by bearer traffic, not its movement.

From the perspective of SS7 network elements, the Signaling Gateway looks like an SS7 Signal Switching Point (SSP) for incoming and outgoing SS7 messages. The Signaling Gateway extracts SS7 information from SS7 protocols and maps that information to IP addresses in the PacketCable network. It then creates an ISTP packet containing the signaling message data and ISTP header, and sends it to the selected node in the PacketCable network.

© SCTE

PacketCable network elements see the Signaling Gateway as an IP end node. The Signaling Gateway takes information from the ISTP header data and maps it to SS7 addresses. It then creates an ISUP, TUP, or TCAP message to send to the SS7 network.

Specifically, the ISTP protocol contains functions for:

- Initialization
- Address mapping between the SS7 and IP domains
- ISUP/TCAP message delivery using Reliable Transport
- Activation and deactivation of circuit identifiers in the SS7 gateway for maintenance
- Error recovery due to faults and congestion

Readers who want more details on the message flows between the signaling gateway, media gateway controllers, and call agents will benefit by referring to the charts in Appendix C in the ISTP specification.

Audio Server Specifications

Audio servers, also known as announcement servers, are network components that manage and play informational tones and messages in response to events that occur in the network. The announcements typically are audio streams that originate from these network-based servers. However, PacketCable also allows for some simple announcements to be provided by the Multimedia Terminal Adapter or the Media Gateway. Examples are an announcement that a call cannot be completed as dialed, or that the subscriber needs to dial 1 before the telephone number.

The PacketCable initiative has published two documents specifically related to audio servers: a technical report and a protocol specification.

PKT-TR-ARCH-AS-V01-001128—Packet Cable Audio Server Architecture Technical Report

The Architecture Technical Report is an overview of the building blocks and the protocols that are required for playing announcements in a PacketCable network. It defines the Audio Server as a logical entity composed of a Media Player Controller (MPC) and a Media Player (MP).[19] The MPC initiates and manages all announcement services provided by the Media Player. The Media Player is a media resource server. It receives and interprets commands from the MPC and delivers appropriate announcements to the MTA as media streams or tones. Since Audio Servers, MPC, and MP are logical entities, the MPC and MP may reside in the same physical entity.

19 Logical entities were discussed in *DigiPoints* Volume III, Issue 11. As a review, remember that a logical entity does not necessarily correlate with a single piece of hardware, and multiple logical entities can be combined in one hardware component.

© SCTE

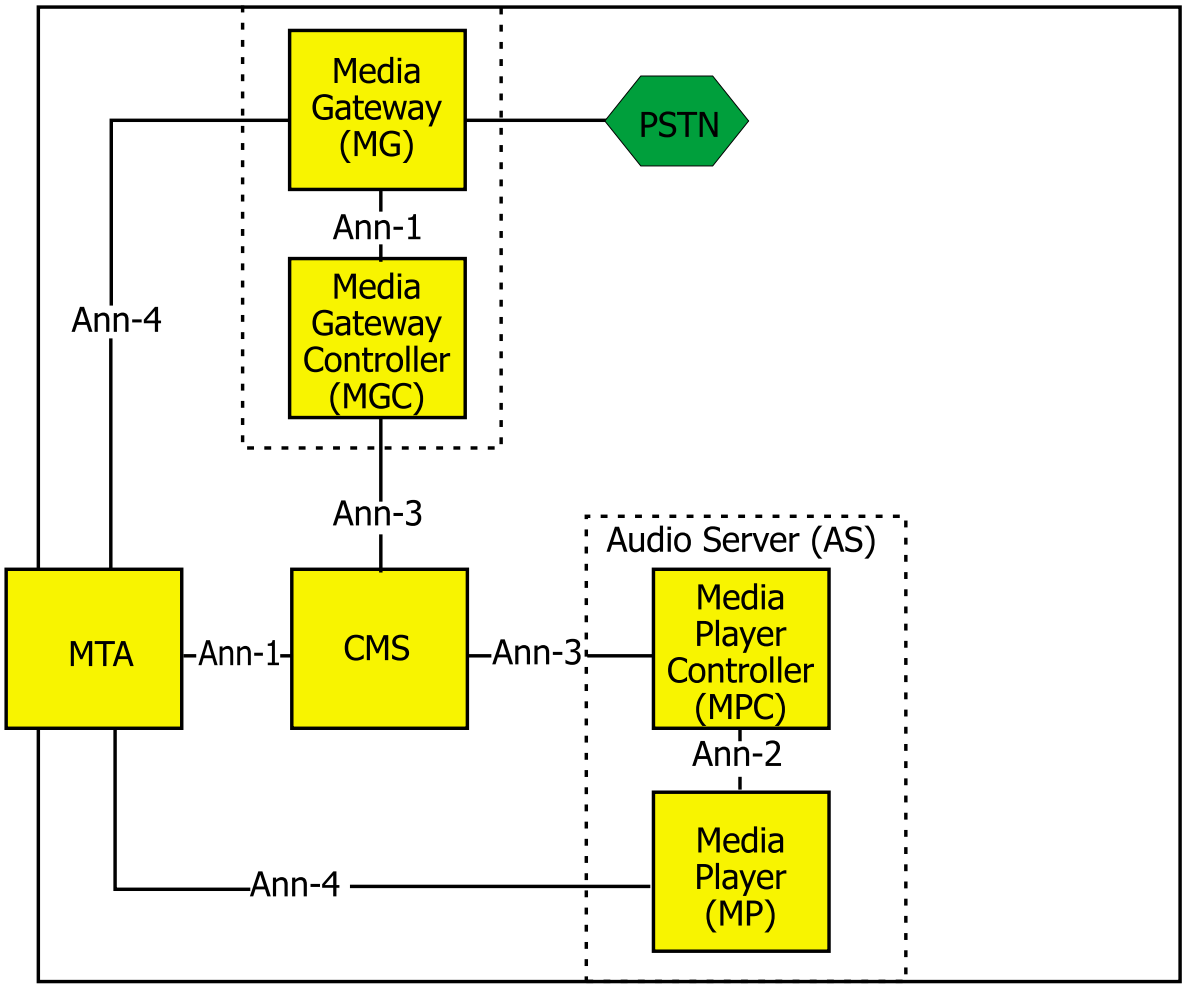

Source: PKT-TR-ARCH-AS-V01-001128, p. 8.

Figure 12-6: Audio Server Components and Interfaces

Four signaling interfaces are introduced in the Technical Report. These interfaces specify how announcements and tones move between the logical entities that comprise an Audio Server, and that connect to it. Security protocols as defined in PKT-SP-SEC-I01-991201 must be used on the signaling interfaces. More detail will be presented when the Audio Server Specification is discussed. Figure 12-6 shows the logical entities and the interfaces.

The Architectural Technical Report also cross-references a number of other specifications such as those that detail the media format for announcement presentation, security, and interfaces with Operational Support Systems (OSS). In addition, it introduces four categories of announcements. The details of these categories are explained in the Audio Server Specification.

PKT-SP-ASP-I01-01128—PacketCable Audio Server Protocol Specification

This specification provides the details of the signaling interfaces between PacketCable components, and of the announcement categories.

Signaling interfaces called Ann-1 through Ann-4 are defined as shown in Figure 12-6.

The four categories of announcements are:

- Tones
- Fixed content announcements
- Variable content announcements
- Interactive announcements

Tones include reorder (no path is available), busy, and ringback. Fixed content announcements are audio messages with fixed content that do not require a user interaction. Variable content announcements contain a variable parameter, such as the dialed phone number, but do not require any user interaction. Interactive announcements require some user action, such as depressing a dial pad key.

Operations Support Systems and Network Management

PKT-TR-OSSI-V02-991201, PacketCable OSS Overview, describes the Operations Support Systems (OSS) structure envisioned by the PacketCable architects. There are a number of other related specifications, which are listed in Table 12-1. These others provide the details behind how operations support information is exchanged between various network elements and higher-level operations systems. Strictly speaking, these other specifications pertain to network and element management, rather than all of OSS. In practical terms, this distinction is blurred.

As background, the reader is advised to refer to Chapter 10 of *DigiPoints Volume Two*, where Network Management is discussed in detail. That chapter of *DigiPoints* includes a comprehensive description of the Telecommunications Management Network (TMN) standard developed by the ITU. TMN is the basis for the specification's "bottom up" view of OSS. The alternate, "top-down" view is based on a process-based framework used by the TeleManagement Forum.[20] Both approaches are summarized later in this section.

PKT-TR-OSSI-V02-991201 makes an excellent point: There is no "typical" Operations System. Service providers in the telephony and the cable industries all have different implementations of OSS, ranging from large, complex management and control to simple status monitoring. Telephony service provider OSSs tend to support telephony, and may not be easily extended to mixed video, voice, and data. Likewise, cable company OSSs are typically centered on the billing system. The PacketCable OSS Overview is an attempt to describe a minimum set of functional components and the linkages that are required to support a PacketCable network.

Figure 12-7 is a diagram that summarizes what is included in that description, and its relationship to other components of a PacketCable network.

20 SMART TMN™ Telecom Operations Map, GB910, Evaluation Version Release 1.1, TeleManagement Forum, April 1999.

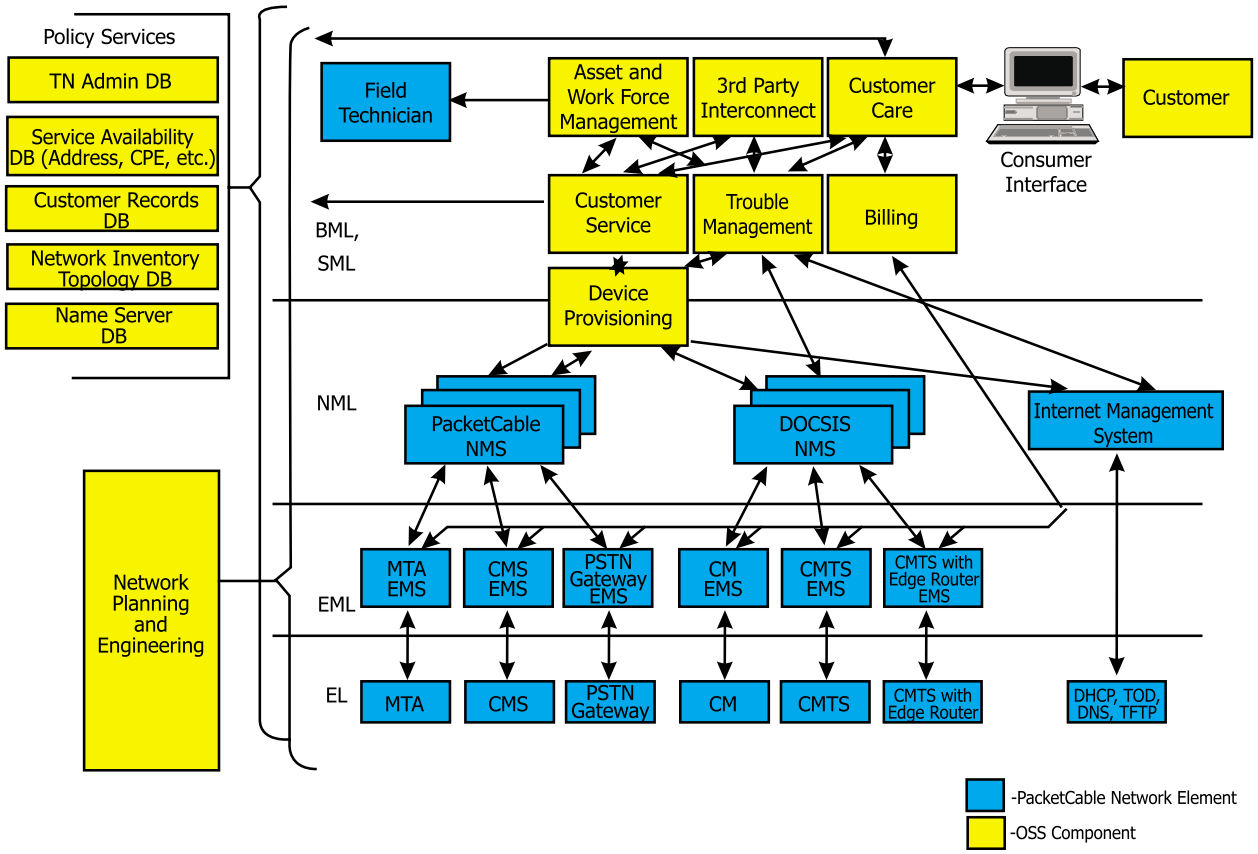

Source: PKT-TR-OSSI-V02-991201, Figure 2.1

Figure 12-7: PacketCable Network Elements and OSS Components

The concepts of Management Events and Management Information Base (MIB) are key to information flows within the architecture shown in the diagram. Briefly, a Management Event is information about network usage and activities, which is tracked and recorded using event messages. A Management Information Base (MIB) is a local database maintained by each communicating entity in a network management system. MIBs contain information about objects associated with the communicating entity, such as hardware status, configuration parameters, or performance statistics.

Summary of TMN

TMN is a layered standard for network management created by ITU. The layers are:

- Network element
- Element management

- Network management
- Service management
- Business management

Network elements are the hardware components of the network. Element management translates the physical implementation of the network into a form that can be processed by a mathematical model. Network management oversees the entire network, based on information provided by the element managers. Service management is the point of contact with subscribers for provisioning, accounts, quality of service, and fault management. Business management is where planning, budgeting, goal setting, and business decisions are made.

Summary of TeleManagement Forum Framework

Figure 12-8 shows the overall Telecom Operations Map defined by the TeleManagement Forum. The top layers of the TMN model define the map (hence, the reason this view is called "top-down"). Specifically, the Customer Care layer corresponds to the customer-facing part of the service management layer of the TMN model, the Service Development and Operations layer corresponds to the service management layer of the TMN model, and the Network and Systems Management layer corresponds to the network-facing part of the service management layer of

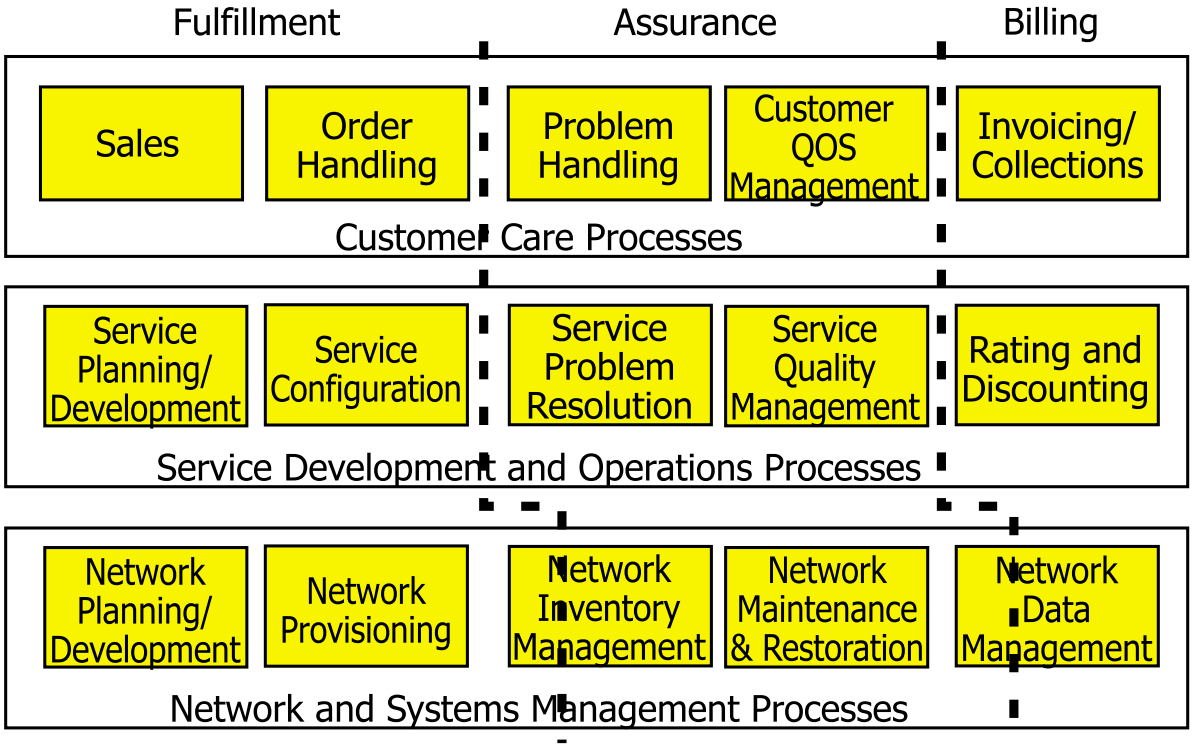

the TMN model.

Figure 12-8: TeleManagement Forum Framework

The PacketCable OSS Overview categorizes these processes and sub-processes within them as "In Scope" or "Out of Scope." In Scope processes are those that need to be implemented first, and are further classified as Phase One or Phase Two. Phase One processes are defined generally for all operators. Phase Two processes are those that are operator-specific.

The following are Phase One processes:[21]

- MTA device provisioning
- Customer service provisioning
- Order entry
- Workflow management
- Dispatch management
- Name service management
- Network inventory
- IP configuration managment
- Network configuration management
- Cable configuration management
- Customer service management
- Accounting
- Billing

Phase Two processes are:

- Network planning and development
- Network provisioning
- Network inventory management
- Network testing, maintenance, and restoration

Out of Scope processes are listed as:

- Customer care and management
- Sales management
- Problem handling
- Customer QoS
- Service planning and development
- Service problem resolution
- Service quality management
- Rating and discounting
- Content provider management

Closing Comments

PacketCable is an evolving initiative. As of 1Q01, its implementation in the field mostly consists of trials of PacketCable 1.0 capabilities. Both operators and vendors need to test conceptual models for protocol and signal flows, and feed changes back into the specifications. While that is occurring, end customer service via an IP architecture remains on a limited basis.

This does not mean that applications are not being offered to customers today. Competition and customer demand are driving operators to offer new services, such as telephony, with other

21 This list does not correspond directly to Figure 12-8 because some of the processes in the list are subprocesses of those in the figure.

© SCTE

technologies to gain market share and early revenue. As long as end-user features, functionality, and pricing are the same, end users do not care which technology supports them.

Vendors and operators are very aware, however, that in the long run, enhanced capabilities are best implemented with packet-based solutions. For example, features like unified messaging require interactions between voice, data, and video that are best provided by packet technology.

This awareness of future needs has prompted vendors to offer a variety of migration strategies to get from interim technologies to a packet-based architecture. Technical personnel have the challenge of evaluating both the target technologies and these interim solutions for functional compatibility and economical transitions. Accurate evaluations are only possible when the evaluator has a comprehensive background in the applications, target technology, and interim solutions. Delivering that background has been the goal of the *DigiPoints* series.

Learning Just Enough to Be Dangerous: Glossary

Border Proxy—In a PacketCable 1.2 network, a signaling component that exchanges call information between domains or between realms in a domain.

CALEA—Communications Assistance for Law Enforcement Act. The law that provides for electronic surveillance by law enforcement agencies.

Call Agent—In NCS 1.0, the entity in the network that maintains the communications state of the call. An important task of the call agent is to provide the line features that are available to the subscriber (e.g., call waiting, call transfer, etc.).

CMS—Call Management Server.

CMSS—Call Management Server Signaling. Protocol for signaling between Call Management Servers.

CMTS—Cable Modem Termination System.

DCS—Distributed Call Signaling: Protocol used for signaling in networks with intelligent endpoints.

DiffServ—Differential Service. One type of Internet architecture that controls packet flow across a network by providing different resource allocations for different types of traffic (e.g., media and signaling).

DQoS—Dynamic Quality of Service. The ability to set Quality of Service on a per call basis.

© SCTE

FCAPS—Five-letter acronym pertaining to the functions of network management: Fault management, configuration management, accounting, performance management, and security management.

G.711—Mandatory codec in PacketCable MTA.

G.728—Optional (recommended) codec in PacketCable MTA.

G.729-E—Optional (recommended) codec in PacketCable MTA.

IQoS—Interdomain Quality of Service. The extension of Quality of Service across domain boundaries.

ISTP—Internet Signaling Transport Protocol. Protocol used between Signaling Gateways and SS7.

ISUP—ISDN User Part. Protocol used in SS7.

Kerberos—One type of security algorithm that uses public keys and encryption.

Media Traffic—Packets originating or terminating on a PacketCable endpoint for which QoS has been requested using Dynamic Quality of Service.

MGCP—Media Gateway Control Protocol.

MIB—Management Information Base. Local database maintained by each communicating entity in a network management system. MIBs include information about hardware status, configuration parameters, and performance statistics.

MP—Media Player. One of the components of an audio server.

MPC—Media Player Controller. One of the components of an audio server.

MTA—Multimedia Terminal Adapter.

PSTN—Public Switched Telephone Network: The set of all telephone networks operated by public telecommunications carriers.

Realm—One or more zones in a PacketCable 1.2 network that is managed as a single entity for security purposes.

RSVP—Resource Reservation Protocol.

SIP—Session Initiation Protocol.

© SCTE

TCAP—Transaction Capabilities Application Part. SS7 protocol used for performing remote database transactions with a Signaling Control Point.

TGCP—Trunking Gateway Control Protocol.

TMN—Telecommunications Management Network. ITU standard for network management.

TOS—Type of Service. A set of bits in a packet header that indicates the communications service (e.g., telephony, data, etc.) being carried by the bits in the user part of the packet.

VAD—Voice Activity Detection. Compression technique that ignores silent periods of speech transmission.

VBR—Variable Bit Rate. Type of compression used in codecs.

Zone—A single CMS and the MTAs it manages.

Testing Your Knowledge

1. What was specified within each of the three phases of the PacketCable initiative?

2. Name the three networks in the PacketCable 1.0 reference model.

3. What is the difference between Dynamic Quality of Service and Provisioned Quality of Service?

4. Name five PacketCable protocols, tell where they are used, and indicate from which protocols they were derived.

5. What are the components of a PSTN gateway, and what are their functions?

6. Name four functions of a Call Management Server that support telephony.

7. Give examples of each of the four categories of announcements provided by an announcement server.

Answers to Questions in *DigiPoints* Volume III, Issue 11

1. What is the fundamental difference between IP telephony and switched-circuit telephony?

   IP telephony moves information across a network in the form of routed packets. There is no dedicated path between calling and called parties during the call. Circuit-switched telephony sets up a dedicated connection through a network for the duration of a call.

© SCTE

2. What are the steps in preparing a voice signal for transmission over an IP network? Which of these steps are common to all analog-to-digital conversions?

   Sampling, Quantizing, Encoding, Compression, and Packetizing. The first three are common to all analog-to-digital conversion. Compression and packetizing are used in an IP network to optimize the use of bandwidth.

3. What is the most common cause of poor quality transmission in an IP telephony call? Why does it happen?

   Network latency (delay) is the most common cause of voice transmission degradation in an IP network. It is usually caused by high traffic on one or more of the networks that make up the internet.

4. Why is it easier to provide good quality IP telephony on an intranet than on the Internet?

   Intranets are owned and operated by one controlling entity. The network operator has full control over which traffic has precedence in that network, and can thus prioritize voice traffic over other packets on the network. This minimizes the delays encountered by the voice packets.

5. What are the four components of IP telephony as specified by H.323?

   Terminals, Gateways, Gatekeepers, and Multipoint Control Units.

6. What are the main functions of an H.323 gatekeeper?
   - *Address translation. This is a key function for IP telephony. The gatekeeper is responsible for address translations required for communications in an H.323 network. It is thus the logical entity that translates an internet address to a telephone number on the PSTN. Other address translations that may be necessary are conversions from Local Area Network aliases (addresses which are specific to a LAN only) to internet addresses.*
   - *Admissions Control. The gatekeeper processes messages that indicate whether a caller is authorized to use the network.*
   - *Bandwidth Control. The gatekeeper must process messages from terminals requesting specific amounts of bandwidth. This function operates together with the associated bandwidth management function.*
   - *Zone Management. Terminals are assigned to gatekeepers within specific zones. The gatekeeper must provide the above three functions to all terminals in its zone.*

7. What are the four components of MGCP, as specified in PacketCable NCS 1.0?

   Endpoints, gateways, embedded clients, and call agents.

8. Your boss says, "Telephony in a cable system is just too risky a business now. We can't commit to circuit-switched HFC telephony with all this talk about IP telephony being the future technology for telecommunications. We need to wait until IP telephony matures

© SCTE

before we get into the telephony business." How would you try to convince him that there are ways to get into telephony now that may make sense?

Even if IP telephony is not ready for widescale implementation, all the major vendors of circuit switched cable telephony equipment have product offerings that provide migration from circuit switched technology to IP. In most cases, these migrations allow continued use of the circuit switched equipment.

Telephony is one of the best new revenue generators in the cable telecommunications industry. In addition to providing approximately $50 per line per month in new revenue, it opens the door to future additional revenue from associated features, such as voice messaging.

Waiting to get into the business opens the door to competition for not only telephony, but also all the other new services. It gives incumbent telephone companies an opportunity to offer both traditional video and new data services to their customers before the cable company offers them. Once a subscriber has committed to any new service, it is difficult to get them to change providers. Market opportunity is therefore lost forever.

© SCTE