Society of Cable Telecommunications Engineers

**ENGINEERING COMMITTEE**
**Interface Practices Subcommittee**

# AMERICAN NATIONAL STANDARD

# ANSI/SCTE 77 2010

# Specification for Underground Enclosure Integrity

# NOTICE

The Society of Cable Telecommunications Engineers (SCTE) Standards are intended to serve the public interest by providing specifications, test methods and procedures that promote uniformity of product, interchangeability and ultimately the long term reliability of broadband communications facilities. These documents shall not in any way preclude any member or non-member of SCTE from manufacturing or selling products not conforming to such documents, nor shall the existence of such standards preclude their voluntary use by those other than SCTE members, whether used domestically or internationally.

SCTE assumes no obligations or liability whatsoever to any party who may adopt the Standards. Such adopting party assumes all risks associated with adoption of these Standards, and accepts full responsibility for any damage and/or claims arising from the adoption of such Standards.

Attention is called to the possibility that implementation of this standard may require the use of subject matter covered by patent rights. By publication of this standard, no position is taken with respect to the existence or validity of any patent rights in connection therewith. SCTE shall not be responsible for identifying patents for which a license may be required or for conducting inquiries into the legal validity or scope of those patents that are brought to its attention.

Patent holders who believe that they hold patents which are essential to the implementation of this standard have been requested to provide information about those patents and any related licensing terms and conditions. Any such declarations made before or after publication of this document are available on the SCTE web site at http://www.scte.org.

All Rights Reserved

© Society of Cable Telecommunications Engineers, Inc. 2010
140 Philips Road
Exton, PA 19341

## TABLE OF CONTENTS

1.0 SCOPE ..... 1

2.0 NORMATIVE REFERENCES ..... 1

3.0 INFORMATIVE REFERENCES ..... 1

4.0 COMPLIANCE NOTATION ..... 2

5.0 DEFINITIONS AND ACRONYMS ..... 3

6.0 ENVIRONMENTAL TESTS ..... 2

7.0 STRUCTURAL LOAD TESTS ON FULL-SIZE PRODUCTS ..... …….4

## LIST OF TABLES

TABLE 1 - DESIGN / TEST LOADS.....9

TABLE 2 - TORQUE VALUE OF BOLTS AND THREADED INSERTS…. …...10

## LIST OF FIGURES

FIGURE 1 – TORQUE TEST SETUP FOR THREADED INSERTS AND BOLTS 7

FIGURE 8 - VERTICAL SIDEWALL LOAD TEST FOR ROUND ENCLOSURES(PEDESTRIAN, TIERS 5, 8 AND 15) 12

FIGURE 9 - VERTICAL SIDEWALL LOAD TEST FOR ROUND ENCLOSURES (TIER 22) 13

FIGURE 10 - BOX LATERAL SIDEWALL TEST FOR BOXES 13

FIGURE 11 - BOX LATERAL SIDEWALL TEST FOR BOXES 14

FIGURE 12 - LATERAL SIDEWALL TEST FOR ROUND ENCLOSURES. 14

FIGURE 7 - BOX VERTICAL SIDEWALL LOAD TEST (TIER 22)……..12

FIGURE 8 - VERTICAL SIDEWALL LOAD TEST FOR ROUND ENCLOSURES (PEDESTRIAN, TIERS 5, 8 and 15)…….….……..12

FIGURE 9 - VERTICAL SIDEWALL LOAD TEST FOR ROUND ENCLOSURES (TIER 22)……..…….….……..13

FIGURE 10 - BOX LATERAL SIDEWALL TEST FOR BOXES <48” LONG…...13

FIGURE 11 - BOX LATERAL SIDEWALL TEST FOR BOXES >48” LONG…...14

FIGURE 12 - LATERAL SIDEWALL TEST FOR ROUND ENCLOSURES DIA……..14

FIGURE 13 - LATERAL SIDEWALL TEST FOR ROUND ENCLOSURES DIA……..….15

## 1.0 SCOPE

1.1 SCOPE: This standard covers conformance tests and requirements for the integrity of grade-level enclosures containing telecommunication or other low voltage apparatus that may be exposed to the public.

1.2 PURPOSE: The purpose of this standard is to describe the requirements for a comprehensive integrity system for grade-level enclosures providing long installation life and minimal maintenance.

## 2.0 NORMATIVE REFERENCES

The following documents contain provisions, which, through reference in this text, constitute provisions of this standard. At the time of publication, the editions indicated were valid. All standards are subject to revision, and parties to agreement based on this standard are encouraged to investigate the possibility of applying the most recent editions of the documents listed below.

2.1 ASTM D543-06 “Standard Practices for Evaluating the Resistance of Plastics to Chemical Reagents”

2.2 ASTM D570-05 “Standard Test Method for Water Absorption of Plastics”

2.3 ASTM D635-06 “Standard Test Method for Rate of Burning and/or Extent and Time of Burning Plastics in a Horizontal Position”

2.4 ASTM D2444-05 “Standard Test Method for Determination of the Impact Resistance of Thermoplastic Pipe and Fittings by Means of a Tup (Falling Weight)”

2.5 ASTM G154-06 “Standard Practice for Operating Fluorescent Light Apparatus for UV Exposure of Nonmetallic Materials”

2.6 US Dept. of Agriculture, Rural Utilities Service, RUS 7 CFR 1755.910 – 11/94 “Specification for Outside Plant Housings and Serving Area Interface Systems”

2.7 ASTM C1028-07 “Standard Test Method for Determining the Static Coefficient of Friction of Ceramic Tile and Other Like Surfaces by the Horizontal Dynamometer Pull-Meter Method"

## 3.0 INFORMATIVE REFERENCES

The following documents may provide valuable information to the reader but are not required when complying with this standard.

3.1 American Association of State Highway and Transportation Officials (AASHTO) "Standard Specification for Highway Bridges" 16th Edition.

3.2 National Fire Protection Association (NFPA) National Electric Code Section 314.30

3.3 Americans with Disabilities Act (ADA) "Accessibility Guidelines for Buildings and Facilities" (ADAAG) and the "Technical Bulletin: Ground and Floor Surfaces". Both are free from US Government website http://www.access-board.gov/.

3.4 Torque values for UNC threads taken from Audel Mechanical Trades, 4th Edition

## 4.0 COMPLIANCE NOTATION

| | |
|---|---|
| "SHALL" | This word or the adjective "REQUIRED" means that the item is an absolute requirement of this specification. |
| "SHALL NOT" | This phrase means that the item is an absolute prohibition of this specification. |
| "SHOULD" | This word or the adjective "RECOMMENDED" means that there may exist valid reasons in particular circumstances to ignore this item, but the full implications should be understood and the case carefully weighted before choosing a different course. |
| "SHOULD NOT" | This phrase means that there may exist valid reasons in particular circumstances when the listed behavior is acceptable or even useful, but the full implications should be understood and the case carefully weighed before implementing any behavior described with this label. |
| "MAY" | This word or the adjective "OPTIONAL" means that this item is truly optional. One vendor may choose to include the item because a particular marketplace requires it or because it enhances the product, for example; another vendor may omit the same item. |

## 5.0 DEFINITIONS AND ACRONYMS

5.1 GRADE-LEVEL ENCLOSURE is defined as an enclosure which houses and protects distribution equipment, including but not limited to: splice cases, excess cable, and construction or pull-box equipment. These enclosures are typically non-metallic. They include a removable cover to support the anticipated loading requirements of the installation.

5.2 FAILURE LOAD is defined as the inability of the product to accept any further increase in load

## 6.0 ENVIRONMENTAL TESTS

NOTE: Forty-five (45) material coupons are required to complete the environmental tests.

6.1 CONTROL SAMPLES. Six (6) specimens of the enclosure material(s) shall be prepared. The thickness shall match the material thickness of the appropriate section of the enclosure. The length and width are determined by the testing equipment to be used. These specimens are the control samples. The control specimens are tested for ultimate flexural strength. The values of load and deflection at failure for each specimen are averaged to establish the control values.

6.2 CHEMICAL RESISTANCE. Twenty-seven (27) material coupons with the same dimensions as the control specimens are measured, weighed, and three specimens exposed to each of the following chemical reagents:

| **REAGENT** | **CONCENTRATION IN WATER SOLUTION** |
|---|---|
| Sodium Chloride | 5% |
| Sulfuric Acid | 0.1N |
| Sodium Carbonate | 0.1N |
| Sodium Sulfate | 0.1N |
| Hydrochloric Acid | 0.2N |
| Sodium Hydroxide | 0.1N |
| Acetic Acid | 5% |
| Kerosene | Per ASTM D543 |
| Transformer Oil | Per ASTM D543 |

The exposure is in accordance with ASTM D543, Immersion Test, Practice "A", Procedures 1 and 2, with both conducted at room temperature, using Standard Laboratory Atmosphere and seven days for all tests. After exposure, the samples are measured, weighed and visually examined for changes. The specimens are tested for ultimate flexural strength. The values of load and deflection at failure for each specimen are averaged to establish the test values for each reagent. The tested specimens must retain at least 75% of the control values for load and deflection and have no more than a 2% change in weight.

6.3 SIMULATED SUNLIGHT EXPOSURE. Three (3) material coupons with the same dimensions as the control specimens are measured, weighed, and tested in accordance with ASTM G154 per Cycle #1 of Appendix X2 to simulate direct solar UV radiation. After exposure, the samples are measured, weighed and visually examined for changes. The specimens are tested for ultimate flexural strength. The values of load and deflection at failure for each specimen are averaged to establish the test values. The tested specimens must retain at least 75% of the control values for load and deflection and have no more than a 2% change in weight.6.4 WATER ABSORPTION. Six (6) material coupons, three (3) for the twenty-four hour test and three (3) for the boil test, with the same dimensions as the control specimens

are measured, weighed, and tested in accordance with ASTM D570, sections 6, 7.1, and 7.5. After exposure, the samples are measured, weighed and visually examined for changes. The specimens are tested for ultimate flexural strength. The values of load and deflection at failure for each specimen are averaged to establish the test values. The tested specimens must retain at least 75% of the control values for load and deflection and have no more than a 2% change in weight.

6.5 FLAMMABILITY. Three (3) material coupons with dimensions 25mm (1 inch) wide by 125mm (5 inch) long by finished product thickness are held in a horizontal position, I ignited on one end, and the rate of burning along the length determined in accordance with ASTM D635-06, sections 4, 5 and 6. The burning rate must be less than 8mm (0.3 inch) per minute for each 3mm (0.1 inch) of thickness.

## 7.0 STRUCTURAL LOAD TESTS ON FULL-SIZE PRODUCTS

It is recognized that as wheels roll over an enclosure, loads are imparted laterally and vertically into the sidewall, and vertically onto the cover. The structural load tests shall use the three test positions as described in paragraphs 7.1 through 7.4 to evaluate enclosures and match the intended application with enclosure performance: Figures 2, 4a, 4b, 6 and 8 for all TIERs up to and including TIER 15; Figures 3, 5a, 5b, 7 and 8 for TIER 22; Figures 9, 10, 11 and 12 for the Lateral Sidewall Test for the enclosures. See Table 1 for the Load Requirements for all TIERs and all sizes of enclosures.

7.1 LATERAL SIDEWALL PRESSURE TEST. The design bearing pressure is uniformly distributed and applied parallel to the top surface of the enclosure on the longest wall as shown in of Figures 10, 11, 12 and 13. The pressures are transmitted by a flat, rigid steel plate(s) 610mm (24 inch) x 457mm (18 inch) x 25mm (1 inch), yielding a surface area of 3 $ft^2$, bearing against any suitable medium which will conform to the shape and angle of the enclosure sidewall (such as sand bags) to achieve uniform pressure. For enclosures with a long wall dimension less than or equal to 1219mm (48 inches), a single loading plate 24 inch wide x 18 inch x 1 inch thick is centered on the sidewall as shown in Figures 10, 12 and 13. For enclosures with a long wall dimension longer than 1219mm (longer than 48 inches), two loading plates 24 inch deep x 18 inch wide x 1 inch thick are used, and the loading plates are located at the L/3 positions and centered vertically as shown in Figure 11 and the design bearing pressure listed in Table 1 is applied to each of the plates. For round enclosures with a tapered wall, use the average inside diameter to as the wall length. For round enclosures with a straight wall, use the inside diameter to as the wall length. For all lengths of enclosures, the opposite sidewall is supported in a like manner to achieve a uniform reaction, or it may be supported on ribs or stiffeners so long as no local failure occurs. A swivel head is used in the testing machine. A typical cover is installed for this test. A deflection measuring device is positioned to measure the relative deflection between the testing machine table and the inside of the loaded sidewall of the enclosure. If a compressible medium is used for a reaction base, its deflection is measured and subtracted from the total to yield the net deflection. Record the deflection at the design bearing pressure (Table 1). The test is repeated ten times to design pressure and the corresponding deflections recorded. The enclosure is then to be loaded to the test pressure, or failure, whichever occurs first.

7.2 VERTICAL SIDEWALL LOAD TEST. For TIERs up to and including TIER 15, the loads are distributed over a 127mm (5 inch) x 254mm (10 inch) area (see Figure 6 and 8). A 254mm (10 inch) x 254mm (10 inch) x 25mm (1 inch) thick steel load plate is positioned over a 13mm (1/2 inch) thick rubber pad so that only a 127mm (5 inch) x 254mm (10 inch) area is effective in transferring the load. The ram is centered in the 127mm (5 inch) x 254mm (10 inch) area. For TIER 22, the loads are distributed over a 127mm (5 inch) x 508mm (20 inch) area (see Figure 7 and 9). A 254mm (10 inch) x 508mm (20 inch x 25mm (1 inch) thick steel load plate is positioned over a 13mm (1/2 inch) thick rubber pad so that only a 127mm (5 inch) x 508mm (20 inch) area is effective in transferring the load. The ram is centered in the 127mm (5 inch) x 508mm (20 inch) area. For all TIERs, the base is fully supported with rigid material. The loading pad is centered on the long dimension and performed with a typical cover in-place. Deflection measuring devices are positioned to indicate vertical and lateral deflection wherever maximum deflection occurs. The Design Load must be cycled ten times. The enclosure is then loaded to the test load, or failure, whichever occurs first. A vertical brace may be used across from the load plate if required for stability.

7.3 COVER VERTICAL LOAD TEST. For TIERs up to and including TIER 15, the vertical load is distributed over a 254mm (10 inch) x 254mm (10 inch) area (see Figures 2, 4a & 4b). The load is to be applied with a 254mm (10 inch) x 254mm (10 inch) x 25mm (1 inch) thick steel load plate backed with a 13mm (1/2 inch) thick rubber shim. For TIER 22, the vertical load is distributed over a 254mm (10 inch) x 508mm (20 inch) area (see Figure 3, 5a & 5b). The load is to be applied with a 254mm (10 inch) x 508mm (20 inch) x 25mm (1 inch) thick steel load plate backed with a 13mm (1/2 inch) thick rubber shim. For all TIERs, a spherical bearing swivel head is used in the testing machine. The cover is mounted in a typical enclosure during the test. The loading pad is centered over the portion of the cover which will produce the maximum deflection under load. Deflection measurements are taken perpendicular to the lid and wherever maximum deflection occurs. A deflection measuring device or devices is positioned so as to measure only the deflection of the cover. The Design Load must be cycled ten times. The specimen is then loaded to the test load, or failure, whichever occurs first.

7.4 LOADING ACCEPTANCE CRITERIA. Failure of any enclosure component shall ot occur at less than the tabulated test load based on the test conducted and the application. See Table 1. The maximum deflection at the indicated Design Load is 13mm (0.5 inch) for vertical tests and 21mm per meter (0.25 inches per foot) of average wall length for lateral tests.

7.5 COVER IMPACT. Any exposed portion of the cover shall withstand a 51.6 Nm (70 foot pound) impact administered by a weight having a “C” tup per ASTM D2444 without puncturing or splitting. The test is conducted with the cover on a flat rigid surface such as concrete or steel plate.

7.6 INTERNAL EQUIPMENT PROTECTION TEST. The enclosure and the internal equipment therein shall remain suitable for use when tested for fire resistance in accordance with RUS specification PE-91 and paragraph xiii of “Performance Criteria

and Test Procedures for Housings" in RUS 7 CFR 1755.910.

| APPLICATION | LOADING REQUIREMENTS | | | |
|---|---|---|---|---|
| Light Duty<br>Pedestrian Traffic Only | Vertical | Test Load | 13.3kN | 3000 pounds |
| TIER 5<br>Sidewalk applications with a safety factor for occasional non-deliberate vehicular traffic | Vertical<br><br>Lateral | Design Load<br>Test Load<br>Design Load<br>Test Load | 22.2 kN<br>33.3 kN<br>28.7 kPa<br>43.1 kPa | 5000 pounds<br>7500 pounds<br>600 pounds/sq.ft.<br>900 pounds/sq.ft.<br>(1800/2700 pounds/ lateral load plate) |
| TIER 8<br>Sidewalk applications with a safety factor for non-deliberate vehicular traffic | Vertical<br><br>Lateral | Design Load<br>Test Load<br>Design Load<br>Test Load | 35.6 kN<br>53.4 kN<br>28.7 kPa<br>43.1 kPa | 8000 pounds<br>12000 pounds<br>600 pounds/sq.ft.<br>900 pounds/sq.ft.<br>(1800/2700 pounds/ lateral load plate) |
| TIER 15<br>Driveway, parking lot, and off-roadway applications subject to occasional non-deliberate heavy vehicular traffic | Vertical<br><br>Lateral | Design Load<br>Test Load<br>Design Load<br>Test Load | 66.7 kN<br>100.1 kN<br>38.3 kPa<br>57.5 kPa | 15000 pounds<br>22500 pounds<br>800 pounds/sq.ft.<br>1200 pounds/sq.ft.<br>(2400/3600 pounds/ lateral load plate) |
| TIER 22<br>Driveway, parking lot, and off-roadway applications subject to occasional non-deliberate heavy vehicular traffic | Vertical<br><br>Lateral | Design Load<br>Test Load<br>Design Load<br>Test Load | 100.1 kN<br>150.1 kN<br>38.3 kPa<br>57.5 kPa | 22500 pounds<br>33750 pounds<br>800 pounds/sq.ft.<br>1200 pounds/sq.ft.<br>(2400/3600 pounds/ lateral load plate) |
| AASHTO H-20 Deliberate vehicular traffic applications. | Certified precast concrete, cast iron, or AASHTO-recognized materials. | | | |

**Table 1 – Design / Test Loads**

7.7 COEFFICIENT OF FRICTION TEST. A typical production cover is tested to assess the slip resistance of the walking surface that is or may be exposed to pedestrian traffic. The static coefficient of friction of this surface must be a minimum of 0.50 as determined using ASTM 1028-06 Section 8, or any equivalent test method. Other test methods are described in Reference 3.3.

7.8 TORQUE VALUE OF FASTENING DEVICES. A typical enclosure has threaded inserts in the box with a bolt that fastens the cover to the box. The torque value of the threaded insert and bolt is based on the thread size. Table 2 shows the recommended design and test torque value of the standard inserts and bolts in use. A typical bolt and insert is tested to determine if it will meet the torque value. The bolt should be threaded into the insert through a steel plate on the bearing ledge of the box, as shown in Figure 6. The bolt is tightened to the test torque value and then

removed from the insert. Failure of a bolt or insert is the inability to remove the bolt by hand from the insert after the load has been released. The box should not show any detrimental affects such as cracks, splitting or spalling.

| Thread Size | Grade 2 | | Grade 5 | | Grade 8 | |
|---|---|---|---|---|---|---|
| | Design | Test | Design | Test | Design | Test |
| 3/8-16 UNC | 15 ft lbs | 23 ft lbs | 25 ft lbs | 38 ft lbs | 37 ft lbs | 56 ft lbs |
| ½-13 UNC | 37 ft lbs | 56 ft lbs | 60 ft lbs | 90 ft lbs | 92 ft lbs | 138 ft lbs |
| 5/8-11 UNC | 74 ft lbs | 111 ft lbs | 120 ft lbs | 180 ft lbs | 180 ft lbs | 270 ft lbs |
| 3/8-7 lag thread | 15 ft lbs | 23 ft lbs | N/A | | N/A | |
| ½-6 lag or coil thread | 37 ft lbs | 56 ft lbs | N/A | | N/A | |

**Table 2 – Recommended Torque Values**

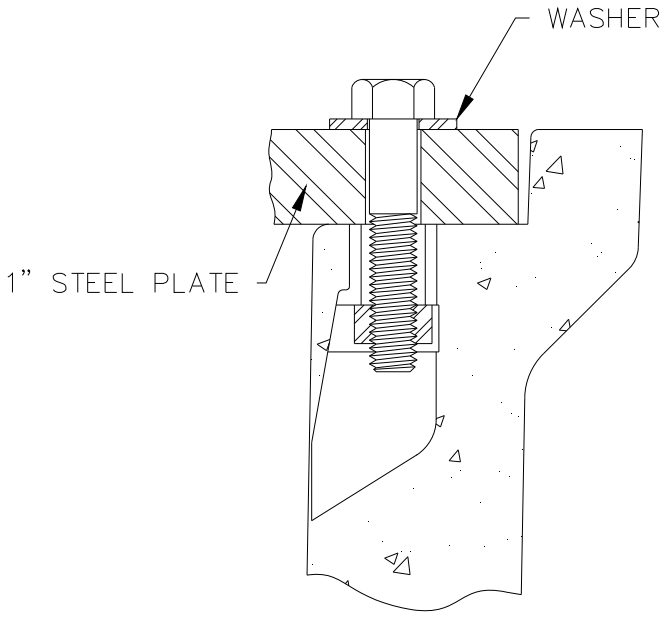


**Figure 1 – Torque Test Setup for Threaded Inserts and Bolts**

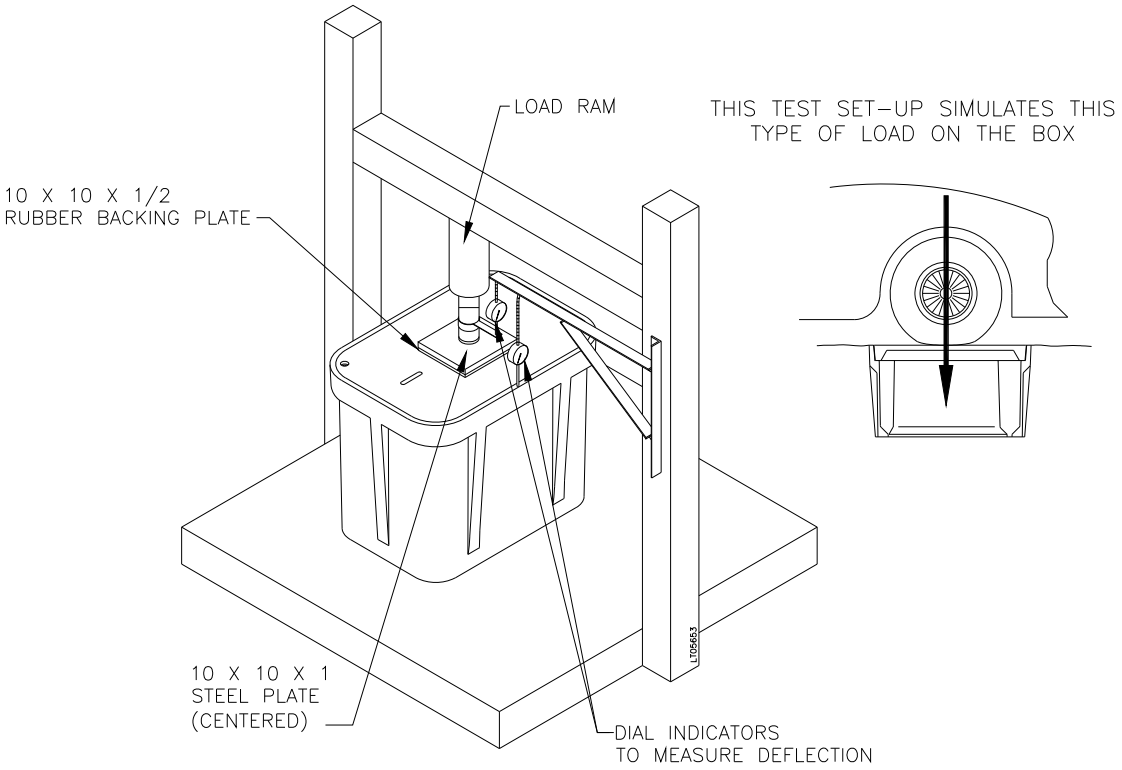


**Figure 2 - Cover Vertical Load Test (Pedestrian, Tiers 5, 8, & 15)**

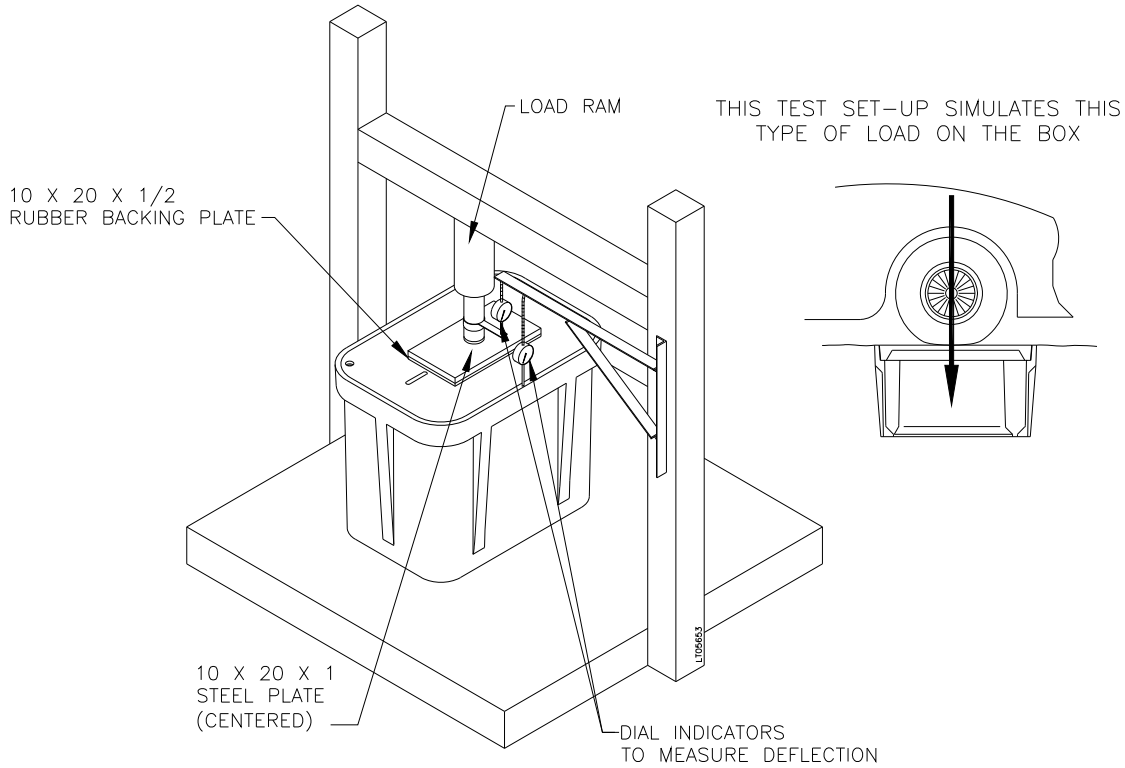


**Figure 3 - Cover Vertical Load Test (Tier 22)**

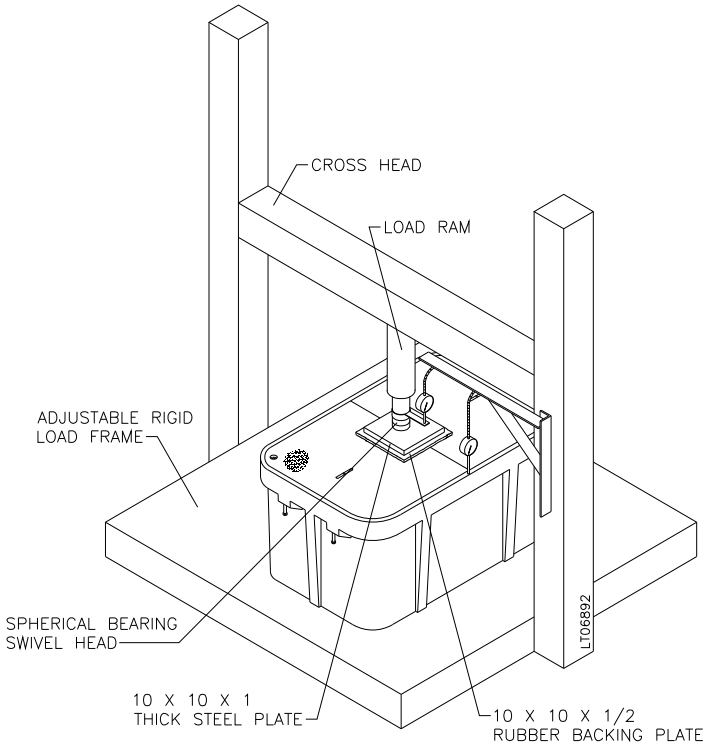


**Figure 4a – Cover Vertical Load Test for Multiple Covers (Pedestrian, Tiers 5, 8, & 15)**

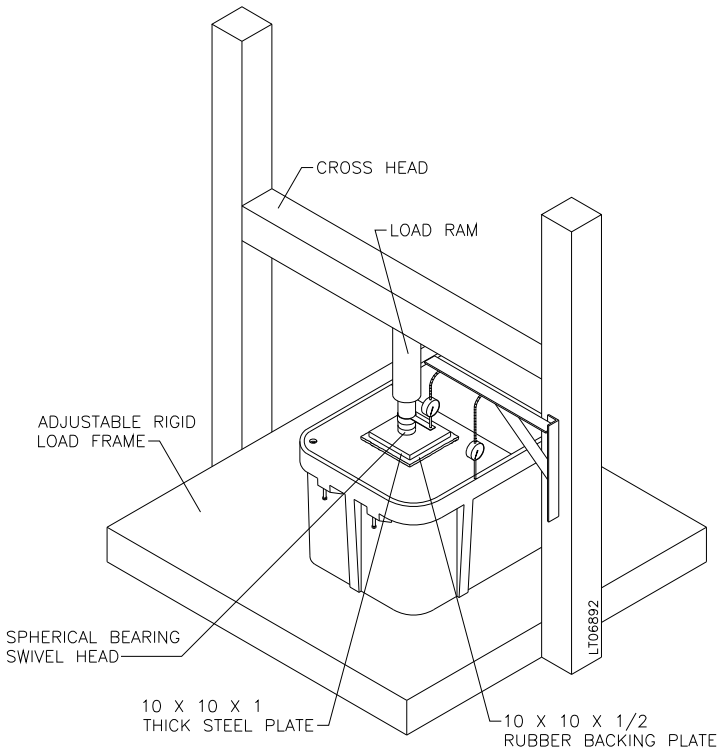


**Figure 4b – Cover Vertical Load Test for Multiple Covers (Pedestrian, Tiers 5, 8, & 15)**

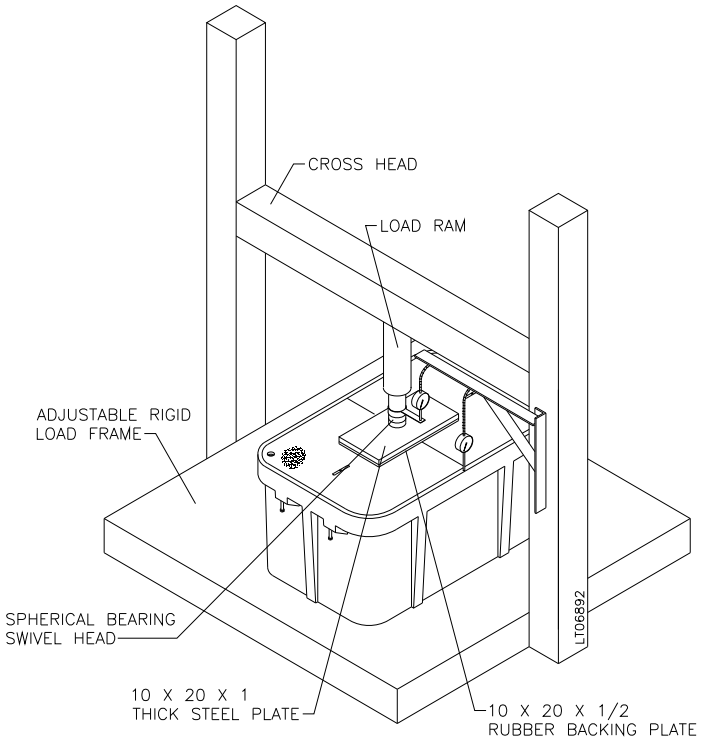


**Figure 5a – Cover Vertical Load Test for Multiple Covers (Tier 22)**

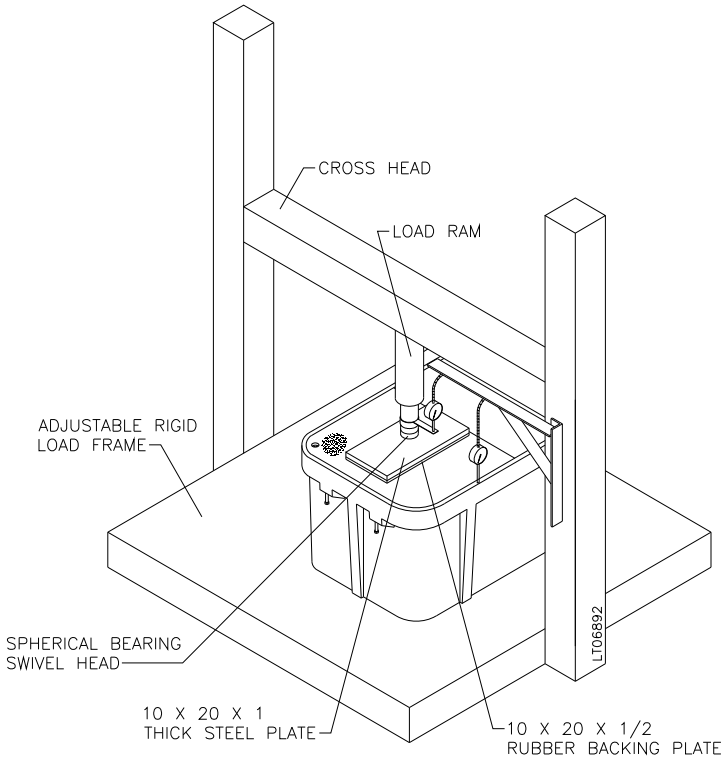

**Figure 5b – Cover Vertical Load Test for Multiple Covers (Tier 22)**

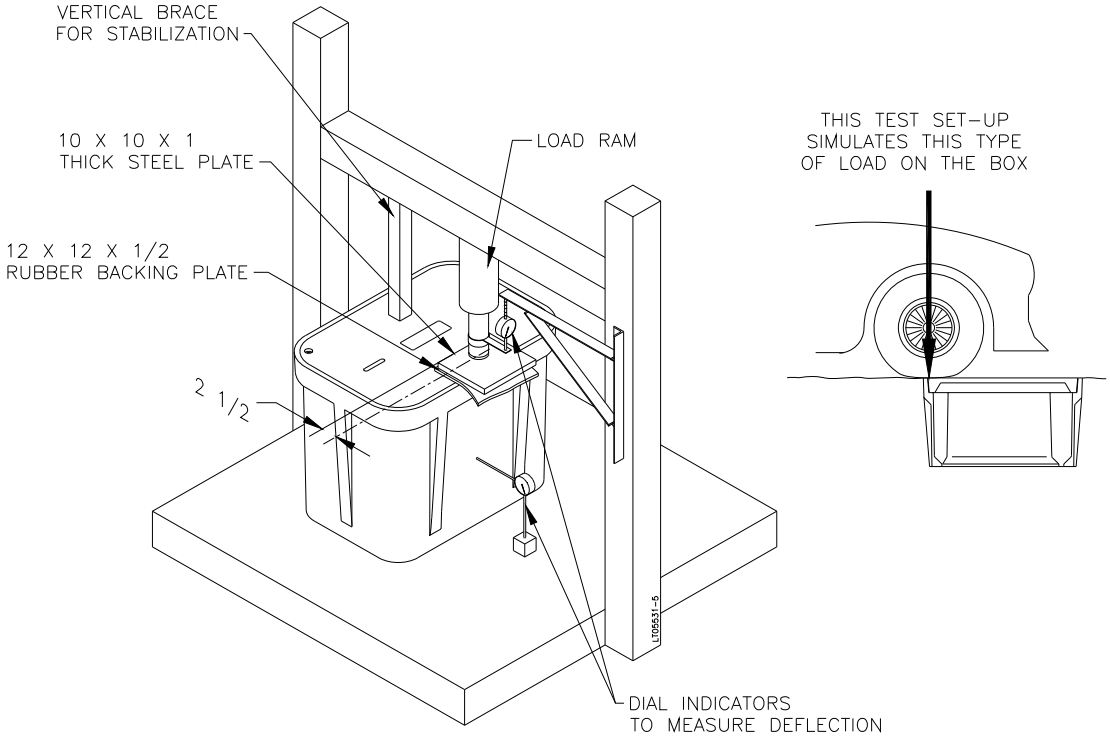


**Figure 6 - Box Vertical Sidewall Load Test (Pedestrian, Tiers 5, 8, & 15)**

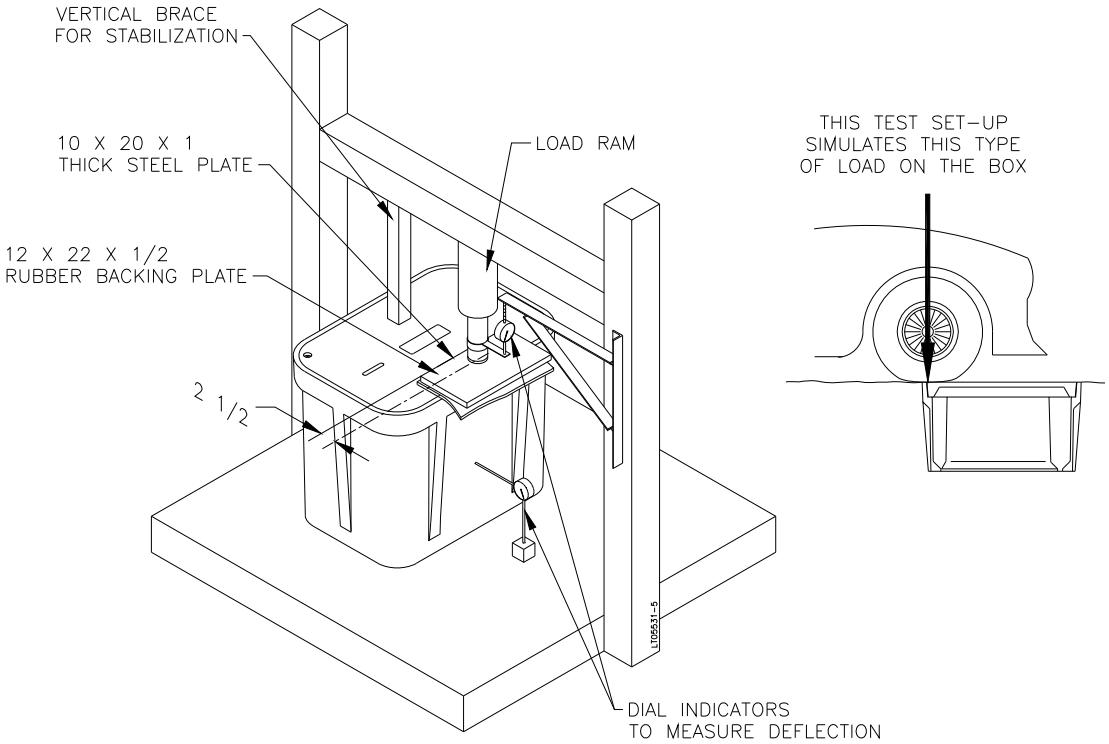

**Figure 7 - Box Vertical Sidewall Load Test (Tier 22)**

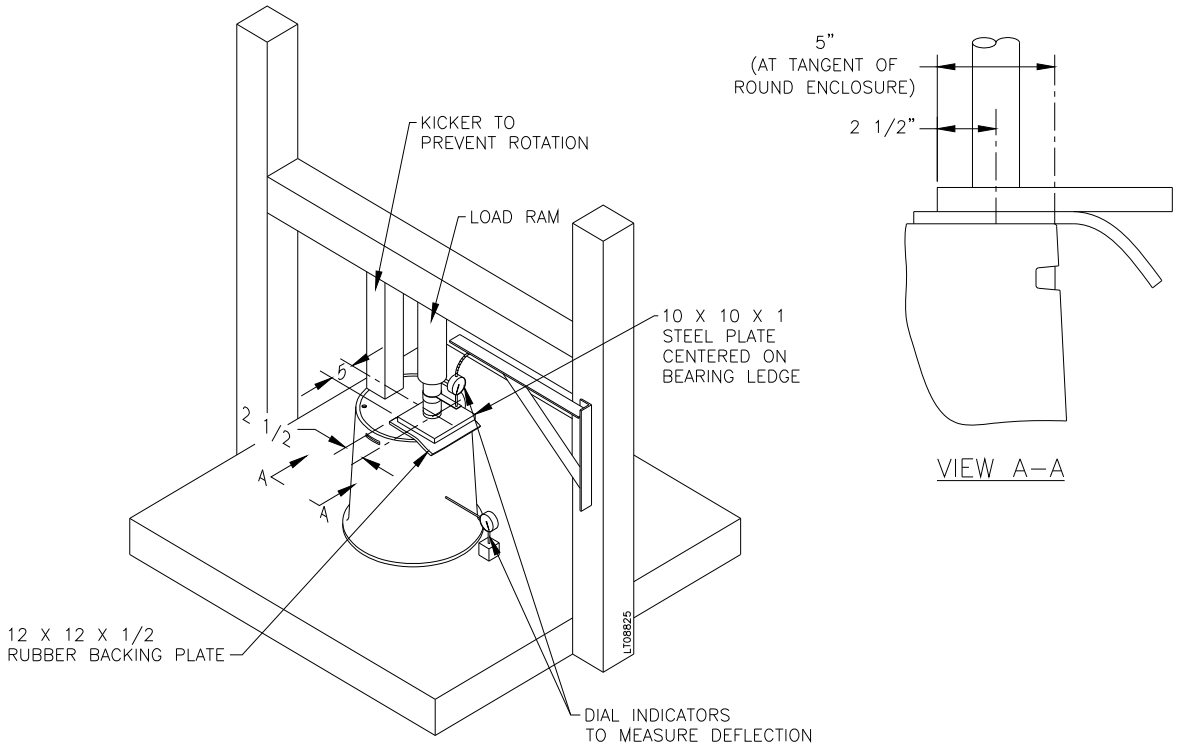


**Figure 8 - Vertical Sidewall Load Test For Round Enclosures(Pedestrian, Tiers 5, 8 and 15)**

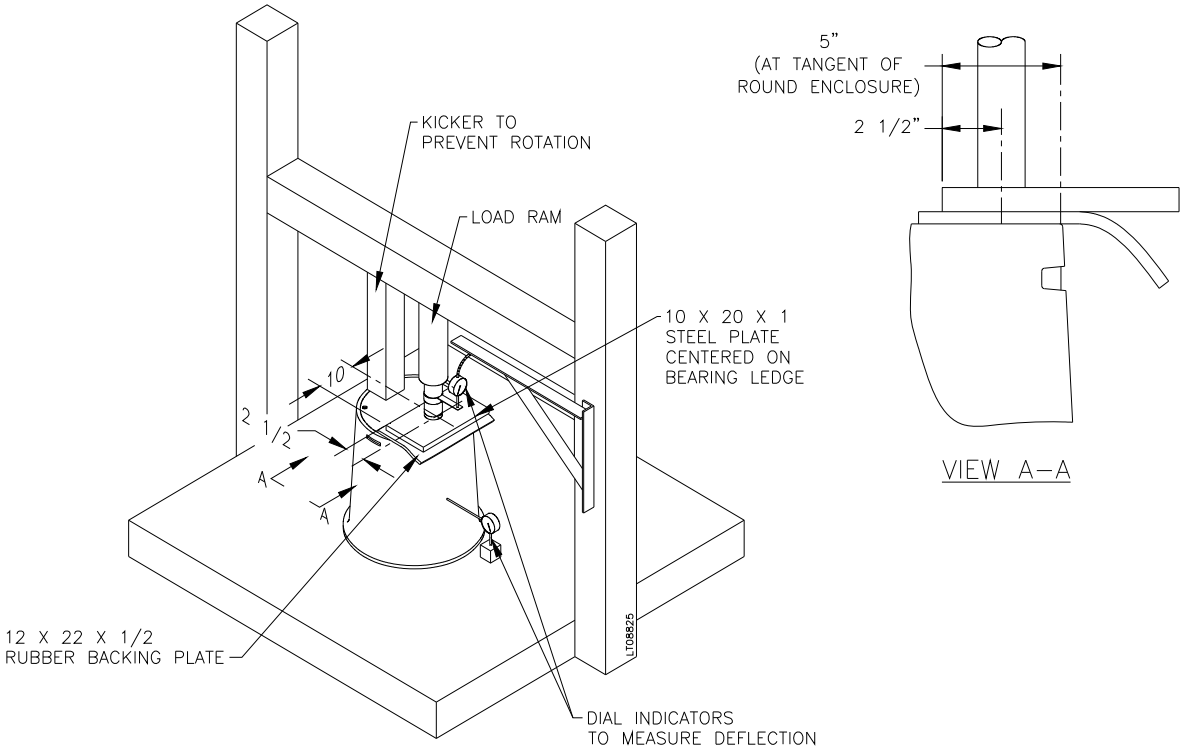


**Figure 9 - Vertical Sidewall Load Test For Round Enclosures (Tier 22)**

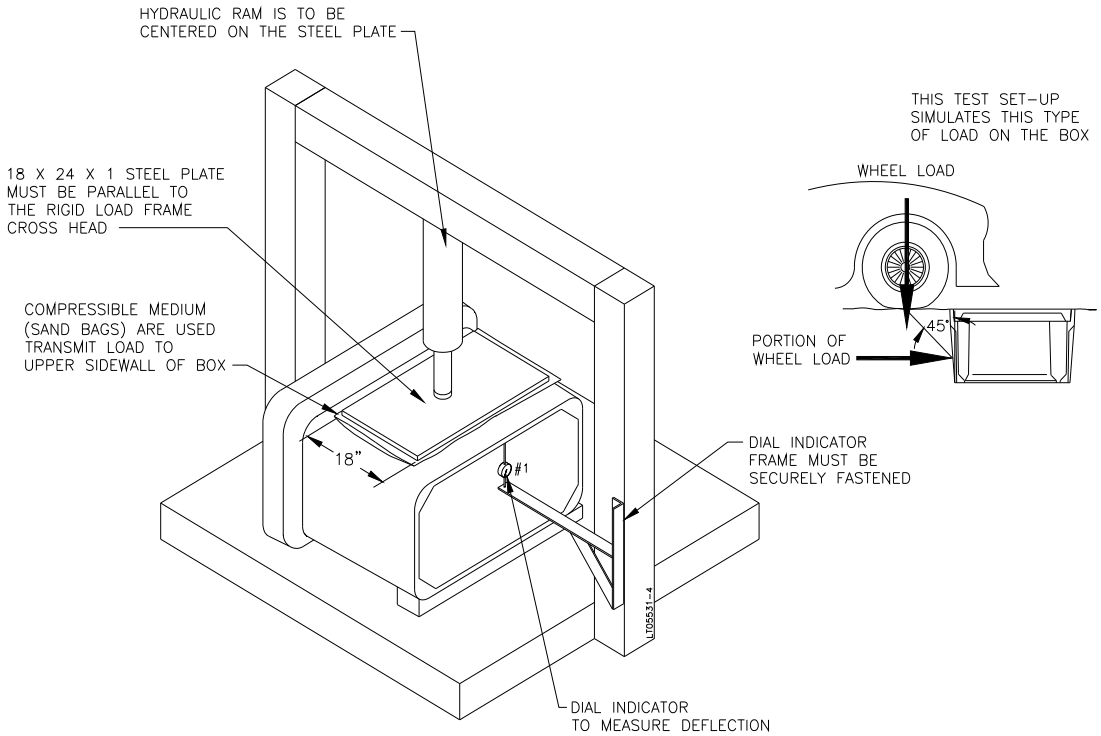


**Figure 10 - Box Lateral Sidewall Test for Boxes < 48" Long**

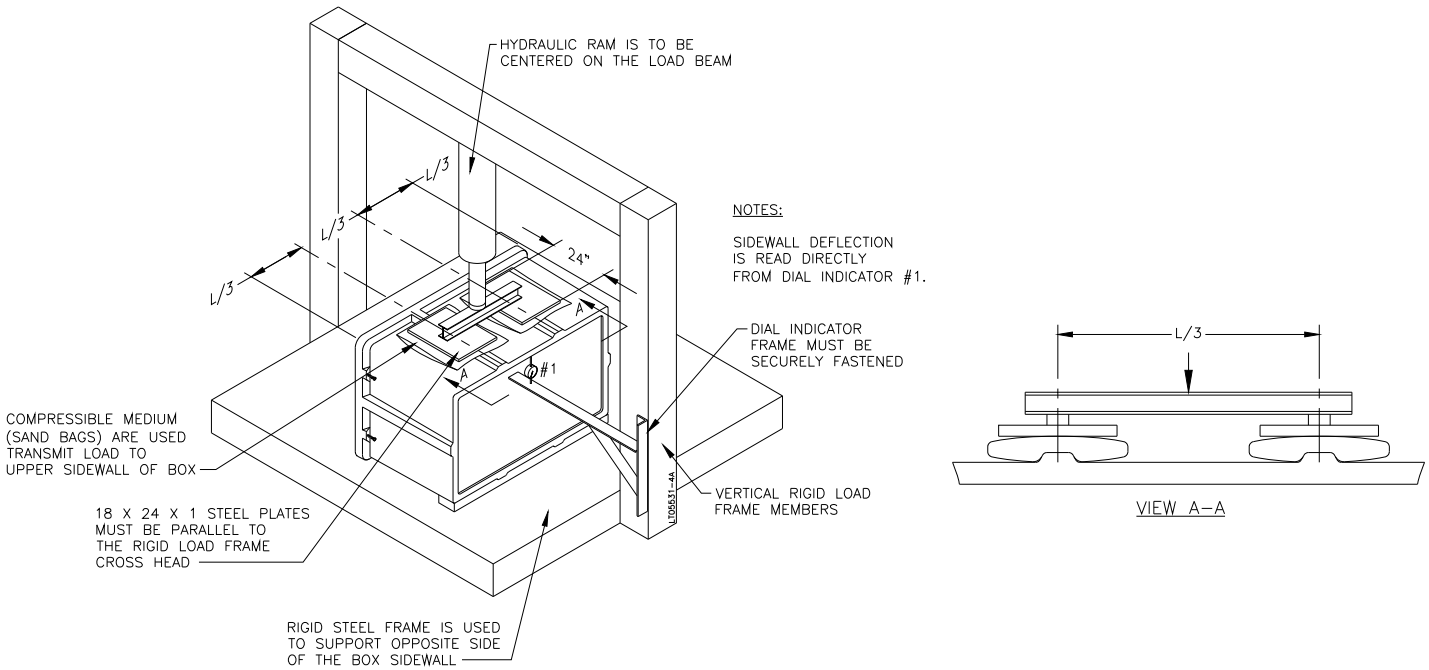


**Figure 11 - Box Lateral Sidewall Test for Boxes >48" Long**

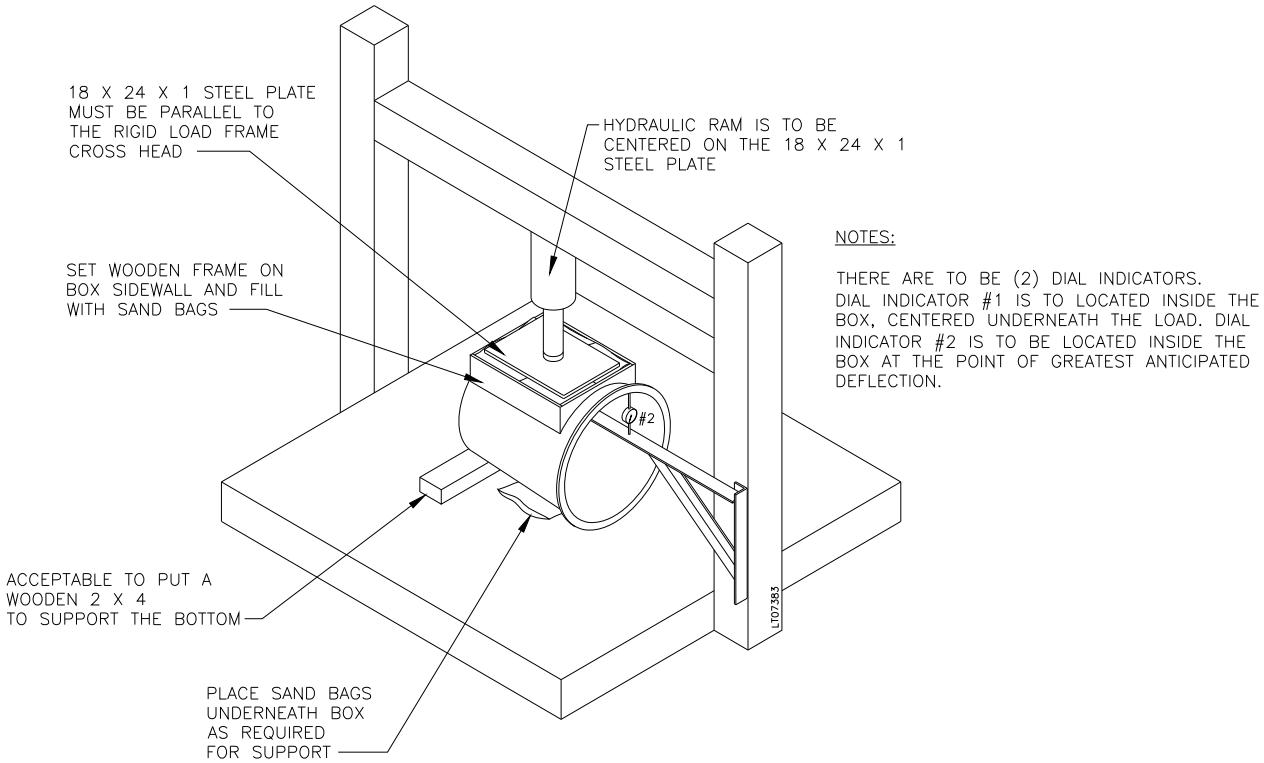


**Figure 12 - Lateral Sidewall Test for Round Enclosures < 24" DIA.**

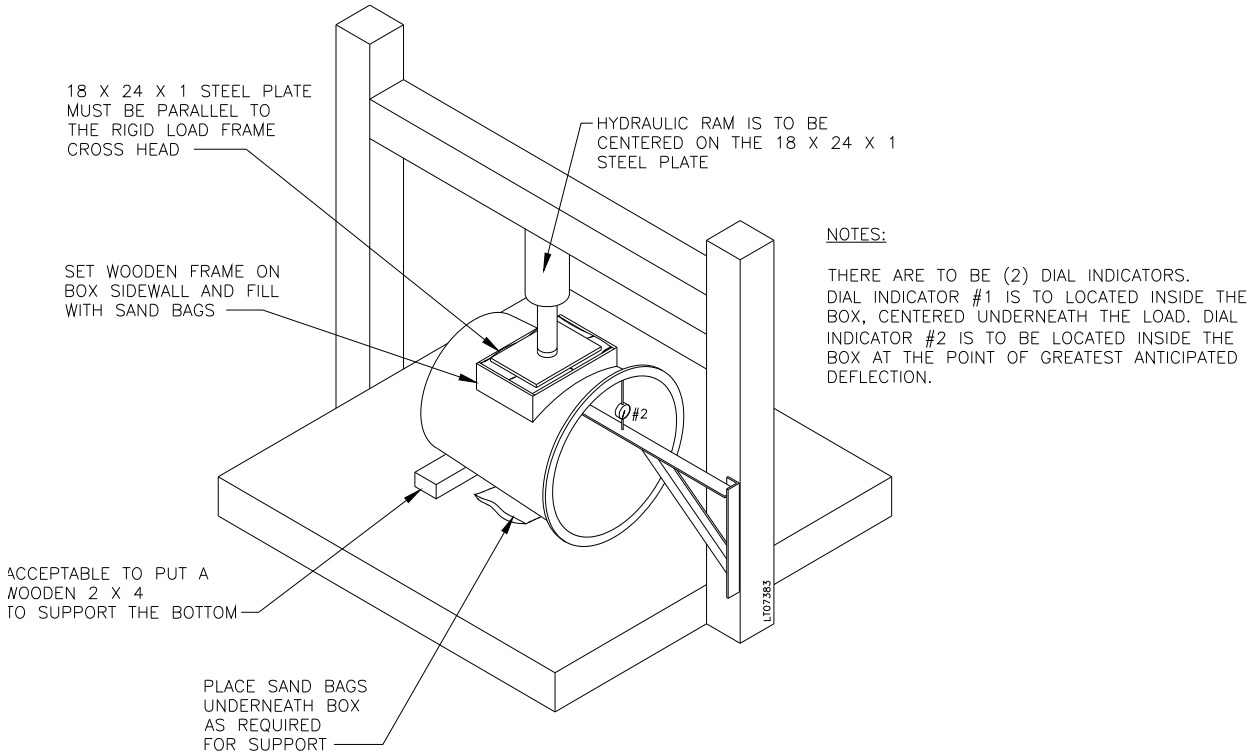


**Figure 13 - Lateral Sidewall Test for Round Enclosures > 24” DIA**